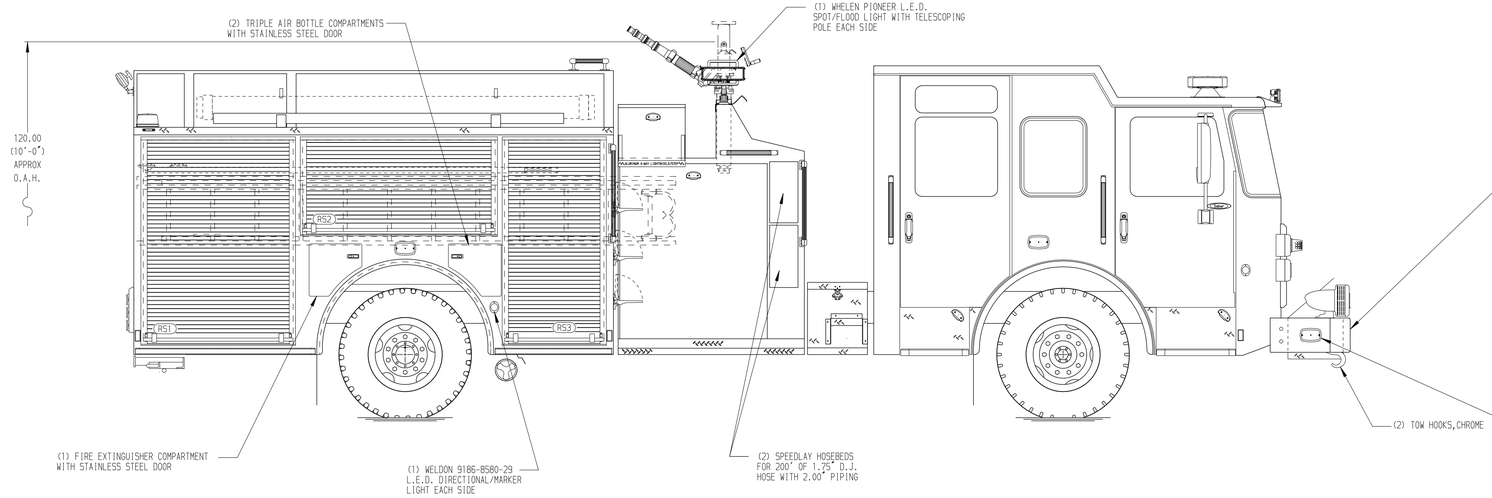

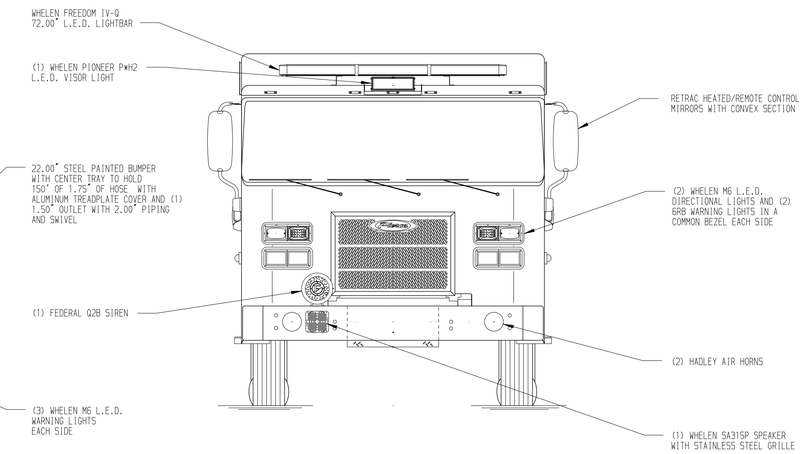

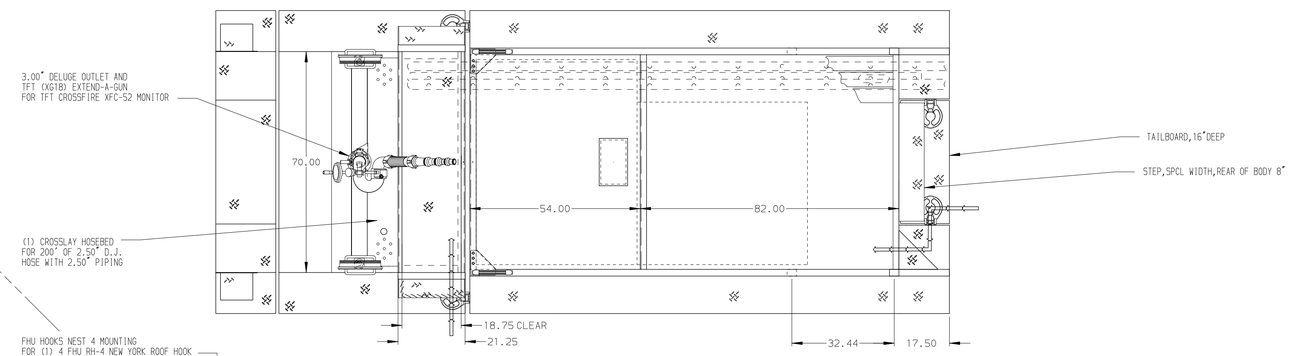

HOSEBED CAPACITIES

1. 200' OF 2.50" D.J. POLY HOSE
2. 1000' OF 5.00" D.J. POLY HOSE
3. 250' OF 2.50" D.J. POLY HOSE (DEADLAY)

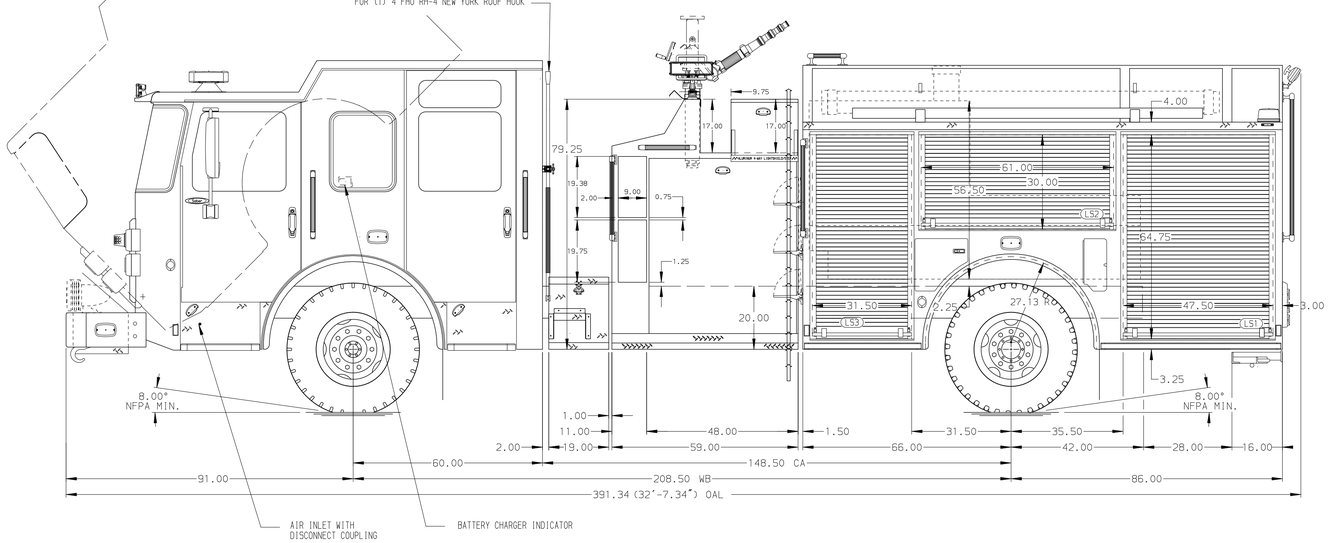

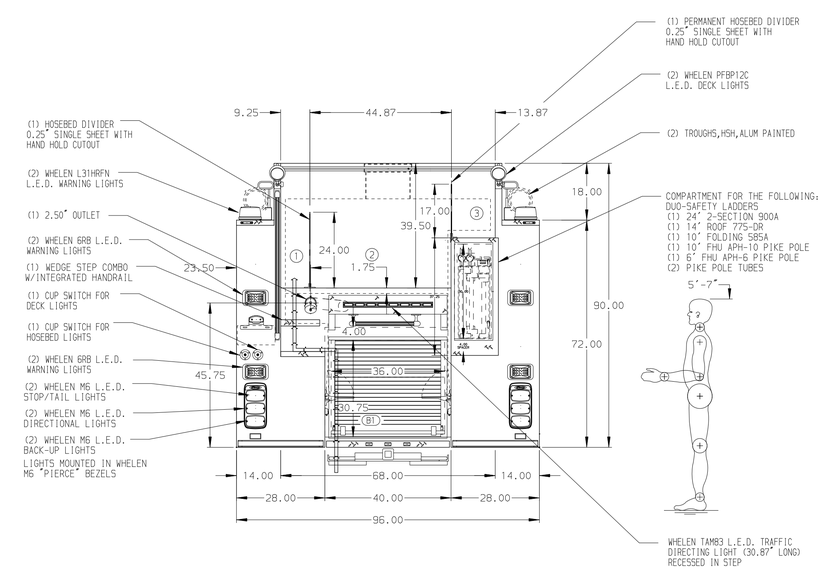

ALUMINUM BODY

SIDE ROLL AND FRONTAL IMPACT PROTECTION

NOTE

DIMENSIONS SHOWN ARE APPROXIMATE AND ARE SUBJECT TO MINOR DEVIATIONS AS MAY OCCUR OR BE NECESSARY IN CONSTRUCTION.
MINOR DETAILS NOT SHOWN.

REV	DATE	BY	CH
▽	-	-	-

CUSTOMER APPROVAL

APPROVED BY: _____

DATE: _____

Pierce MANUFACTURING INC.

CHASSIS DATA	TITLE	1250-D-750P 152" FULL HEIGHT FRONT & REAR, FDLER (1)XLAY, (2)SPEEDLAYS, LADDERS THRU BODY, DELUGE	JOB NO. 33697
MAKE PIERCE	FOR	FORT WAYNE FIRE DEPARTMENT FORT WAYNE, INDIANA	SCALE 1:24
MODEL SABER FR	DWG NO.	33697AD	DRAWN BY MWA 13MAR19
			CHECKED BY SMA 04MAR19
			SHEET SIZE D
			SHEET NO. 1 OF 1

View File Created 15-MAR-2019 07:46:14