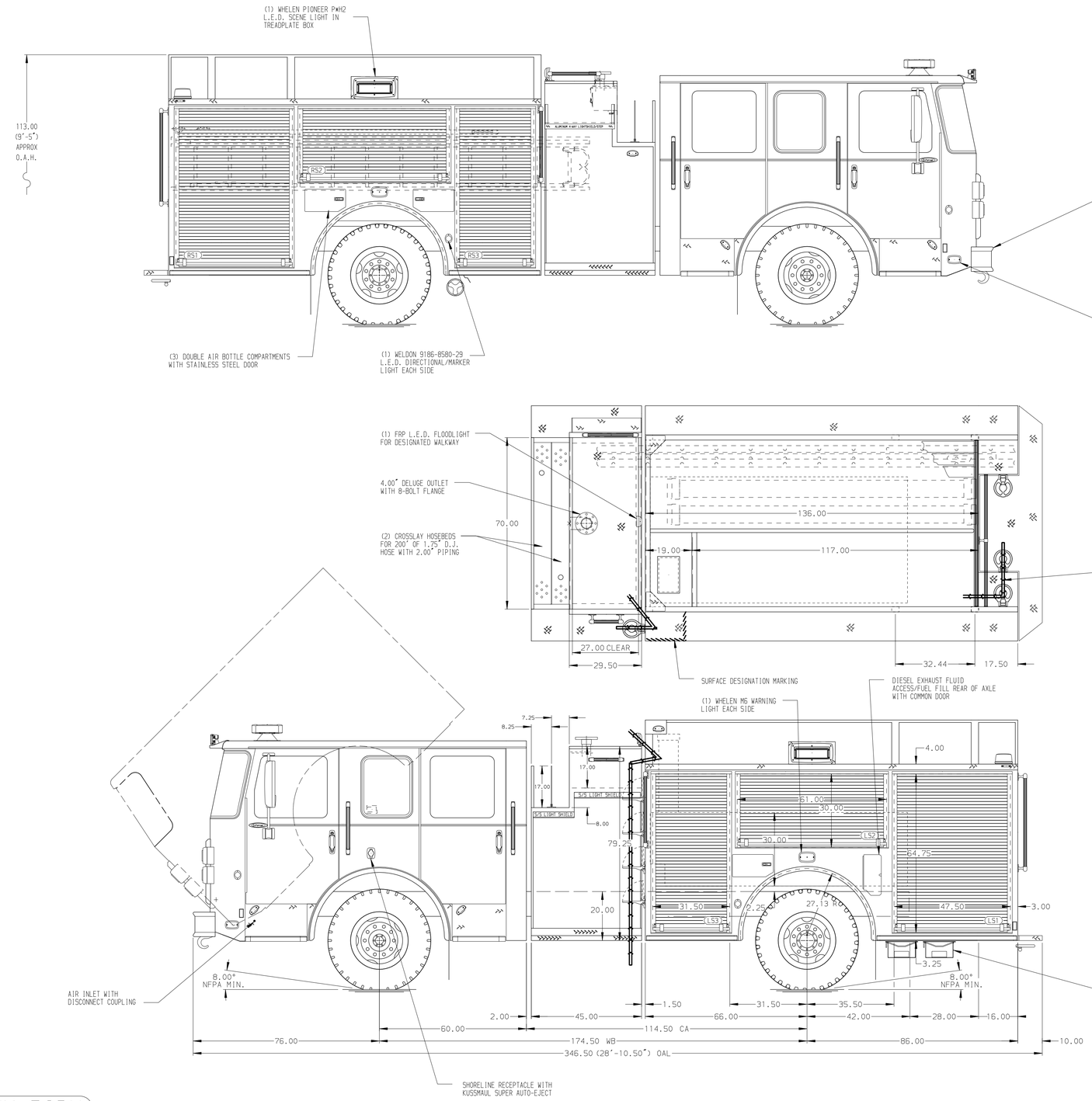

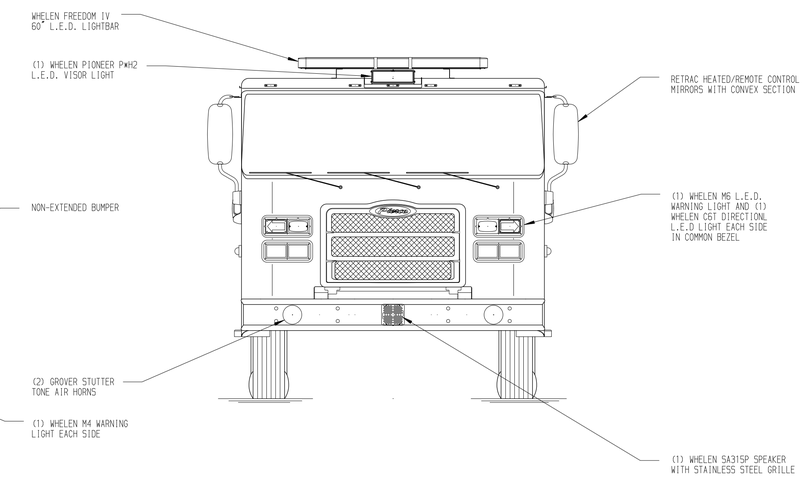

HOSEBED CAPACITIES
1 - 250' OF 2.50" HOSE
2 - 500' OF 2.50" HOSE
3 - 500' OF 3.00" HOSE
4 - 500' OF 5.00" HOSE

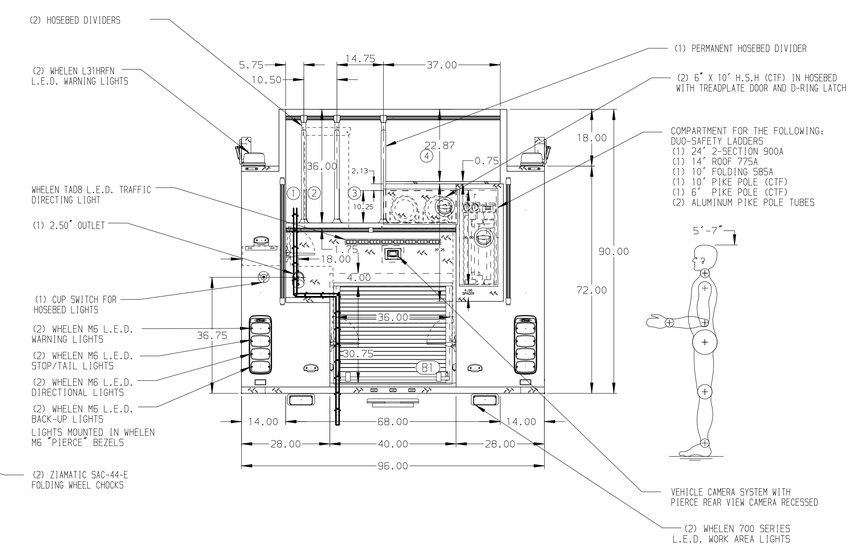

ALUMINUM BODY

NOTE
DIMENSIONS SHOWN ARE APPROXIMATE AND ARE SUBJECT TO MINOR DEVIATIONS AS MAY OCCUR OR BE NECESSARY IN CONSTRUCTION.
MINOR DETAILS NOT SHOWN.

1. BATTERY CHARGER/COMPRESSOR LOCATED IN COMPARTMENT LS3
2. BATTERY CHARGE INDICATOR LOCATED THRU WINDOW BEHIND DRIVER SEAT
3. DRIP PAN GUARD FOR ROLL-UP DOOR LOCATED LS1, LS2, LS3, RS1, RS2, RS3, & B1
4. ONE FULL WIDTH/DEPTH ADJUSTABLE SHELF IN COMPARTMENT LS1, LS3, RS1, RS3, & B1
5. ONE FLOOR MOUNTED SLIDE-OUT TRAY IN COMPARTMENT B1
6. ALUMINUM PEGBOARD WITH TRACKS ON THE BACK WALL OF COMPARTMENT LS2, LS3, RS2, & RS3

REV	DATE	BY	CH
1	04JUN19	MMF	EFA
2	09MAY19	MMF	EFA
3	25MAR19	KLE	NPE

CHASSIS DATA
MAKE: PIERCE
MODEL: ENFORCER

Pierce MANUFACTURING INC.

TITLE: 1500-D-500P,152" BODY FULL HEIGHT FRONT & REAR,FDLER (2)XLAYS, LADDERS THRU BODY, (2) H.S.H, DELUGE
FOR: ILLINOIS FIRE SERVICE INSTITUTE CHAMPAIGN, ILLINOIS
DWG NO.: 33720AD

JOB NO.	33720
SCALE	1:24
DATE	
DRAWN BY	MMF
11MAR19	
CHECKED BY	NPE
15MAR19	
SHEET SIZE	D
SHEET NO.	1 OF 1

View File Created 06-JUN-2019 11:34:06