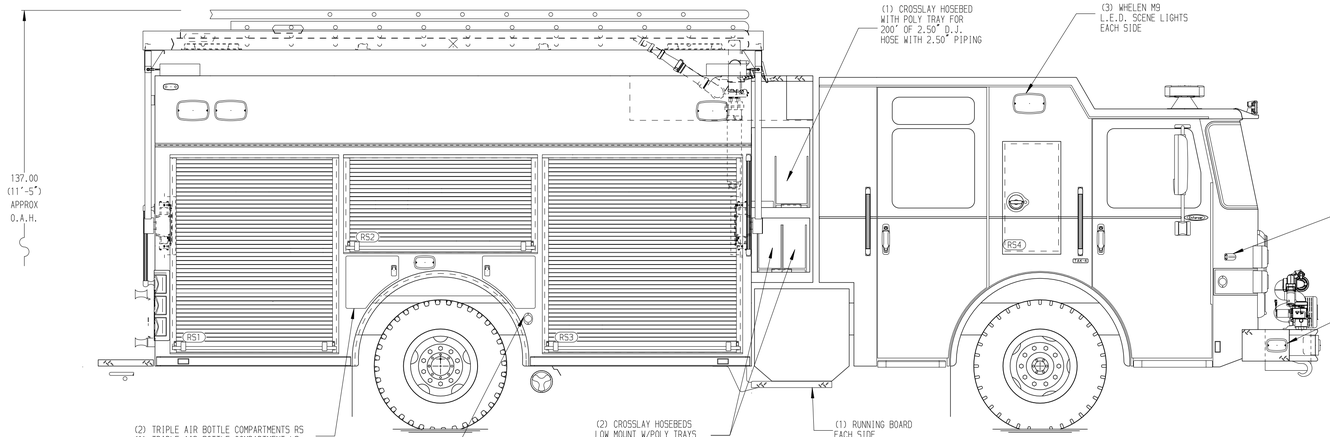

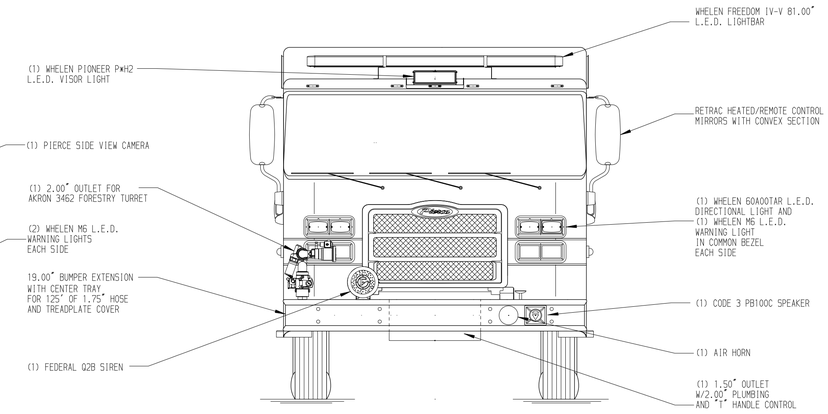

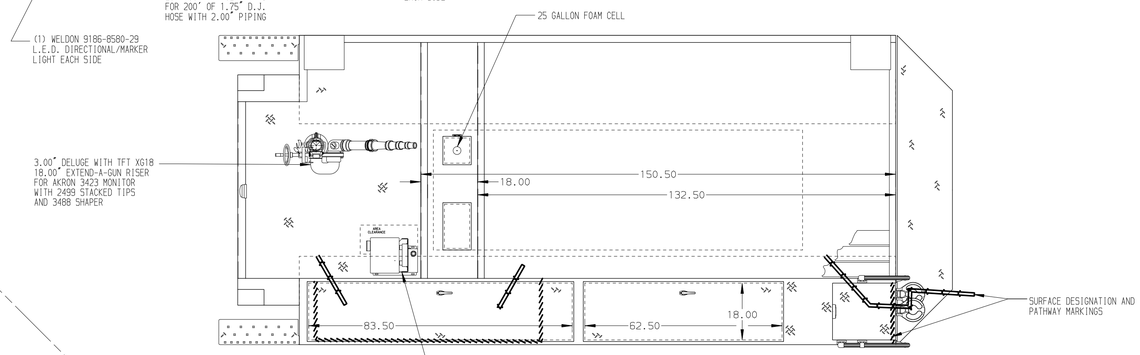

HOSEBED CAPACITIES

1. 1000' OF 5.00" D.J. POLY HOSE
2. 300' OF 2.50" D.J. POLY HOSE
3. 300' OF 1.75" D.J. POLY HOSE

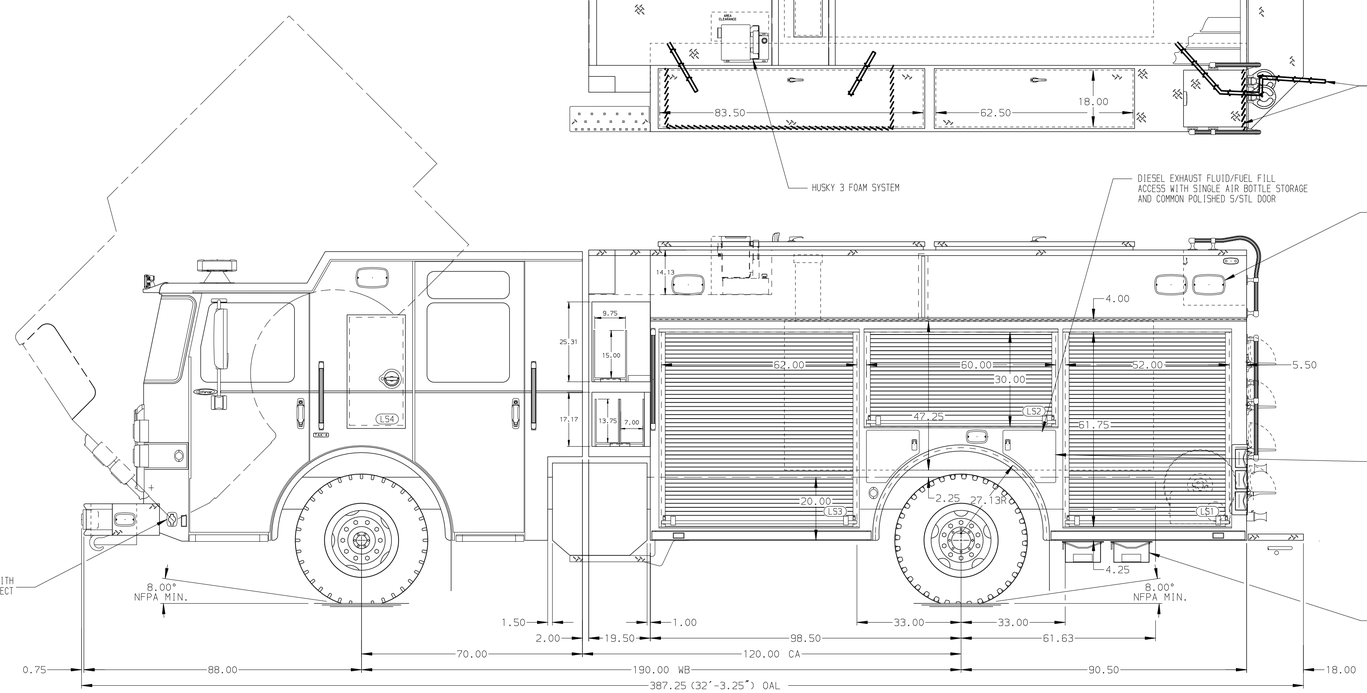

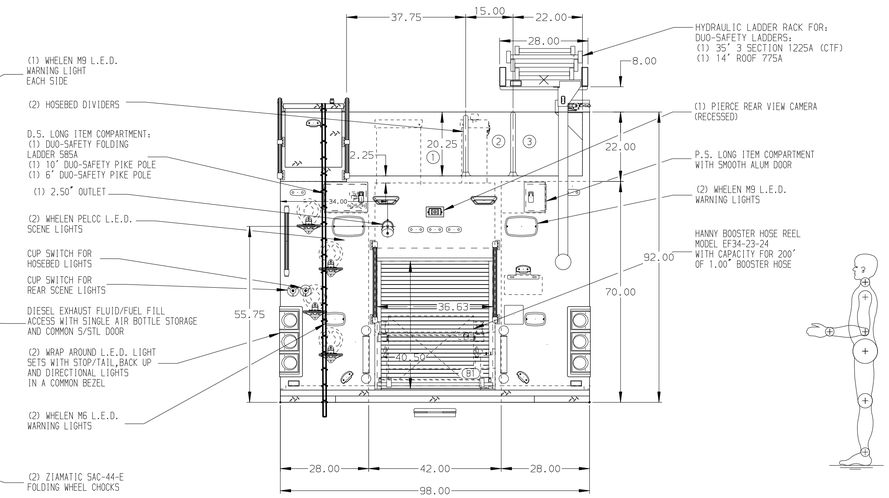

ALUMINUM BODY

SIDE ROLL AND FRONTAL IMPACT PROTECTION

NOTE

DIMENSIONS SHOWN ARE APPROXIMATE AND ARE SUBJECT TO MINOR DEVIATIONS AS MAY OCCUR OR BE NECESSARY IN CONSTRUCTION.
MINOR DETAILS NOT SHOWN.

1. ONE L.E.D. LIGHT STRIP LOCATED ON EACH SIDE IN THE HOSEBED
2. ONE ADJUSTABLE FULL WIDTH/FULL DEPTH SHELF IN COMPARTMENTS LS1,RS2,B1, TWO IN LS3,RS1,RS3
3. ONE PAINTED ADJUSTABLE TILTING SLIDE-OUT TRAY IN COMPARTMENT LS1
4. ONE FLOOR MOUNTED SLIDE-OUT TRAY IN COMPARTMENTS LS1,RS1,RS3
5. ONE SWING-OUT ALUMINUM TOOL BOARD IN COMPARTMENT LS2

REV	DATE	BY	CH
V	06JUN19	KLE	MSA
V	07MAY19	KLE	MSA
V	01APR19	KLE	WKL

CHASSIS DATA
MAKE: PIERCE
MODEL: ENFORCER

Pierce MANUFACTURING INC.

TITLE: 1500-D-750P W/25G FOAM,189",FULL HEIGHT & DEPTH,PUC (3) X-LAYS,DELUGE,BOOSTER REEL
FOR: LEWISTON FIRE DEPARTMENT
LEWISTON, IDAHO
DWG NO.: 33725AD

JOB NO.	33725
SCALE	1:24
DATE	
DRAWN BY	KLE 21MAR19
CHECKED BY	WKL 26MAR19
SHEET SIZE	D
SHEET NO.	1 OF 1

View File Created 11-JUN-2019 14:29:53