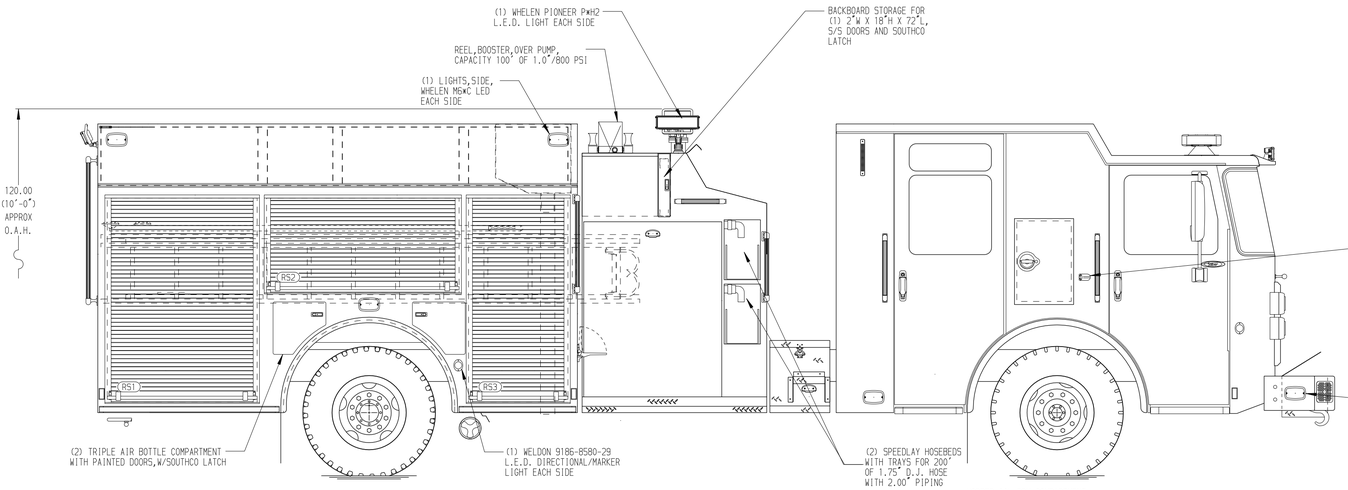

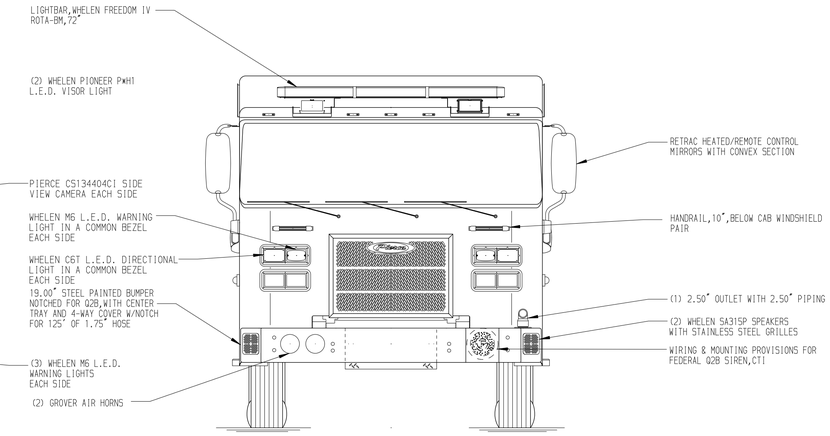

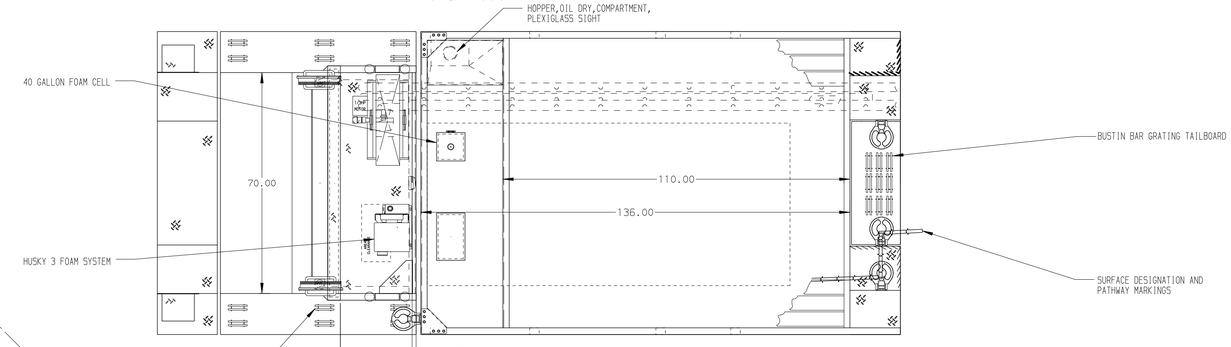

HOSEBED CAPACITIES

1. 200' OF 2.50" DJP HOSE
2. 1000' OF 5.00" DJP HOSE
3. 600' OF 3.00" DJP HOSE

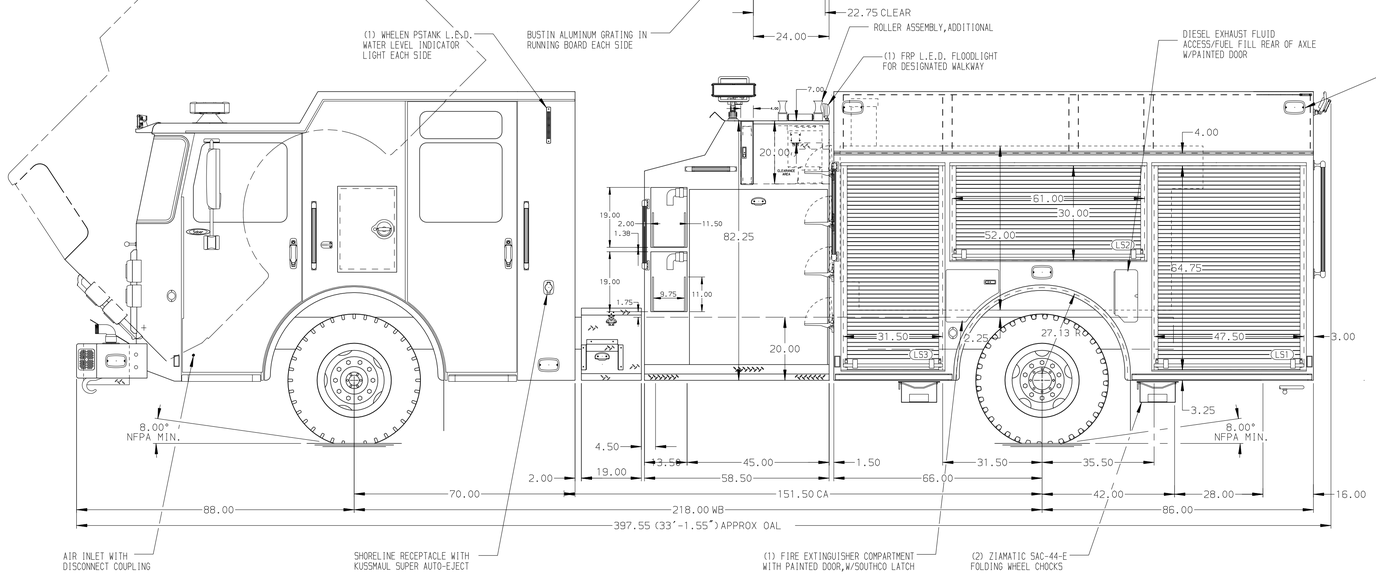

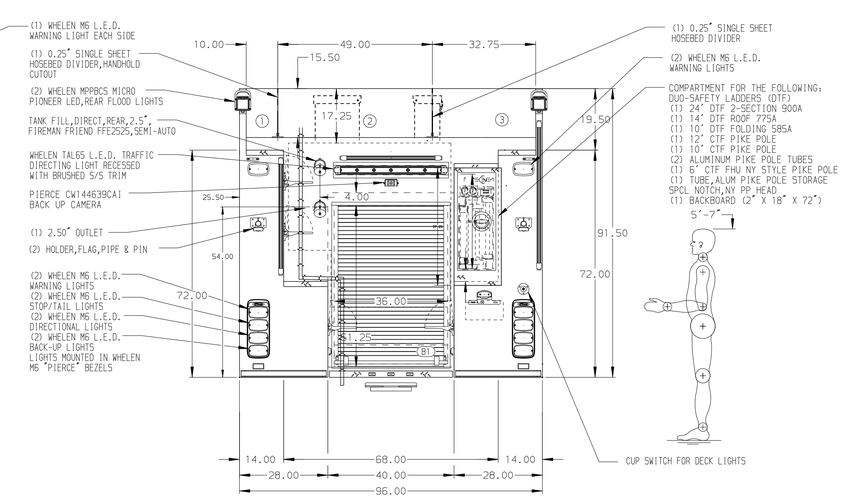

ALUMINUM BODY

NOTE

DIMENSIONS SHOWN ARE APPROXIMATE AND ARE SUBJECT TO MINOR DEVIATIONS AS MAY OCCUR OR BE NECESSARY IN CONSTRUCTION.
MINOR DETAILS NOT SHOWN.

REV	DATE	BY	CH
1	12JUN19	CRH	GSC
0	27MAR19	KLE	WKL

CHASSIS DATA — MAKE: PIERCE — MODEL: SABER FR

Pierce MANUFACTURING INC.

TITLE: 1500-D-960P W/40G FOAM, 152" BODY, (3) SPEEDLAYS HSH IN HOSEBED, LDRS BTWN BODY & S/S

FOR: CITY OF CLINTON, CLINTON, OKLAHOMA

DWG NO.: 33742AD

JOB NO.	33742
SCALE 1:24	DATE
DRAWN BY KLE	22MAR19
CHECKED BY WKL	22MAR19
SHEET SIZE D	SHEET NO. 1 OF 1

View File Created 13-JUN-2019 14:53:58