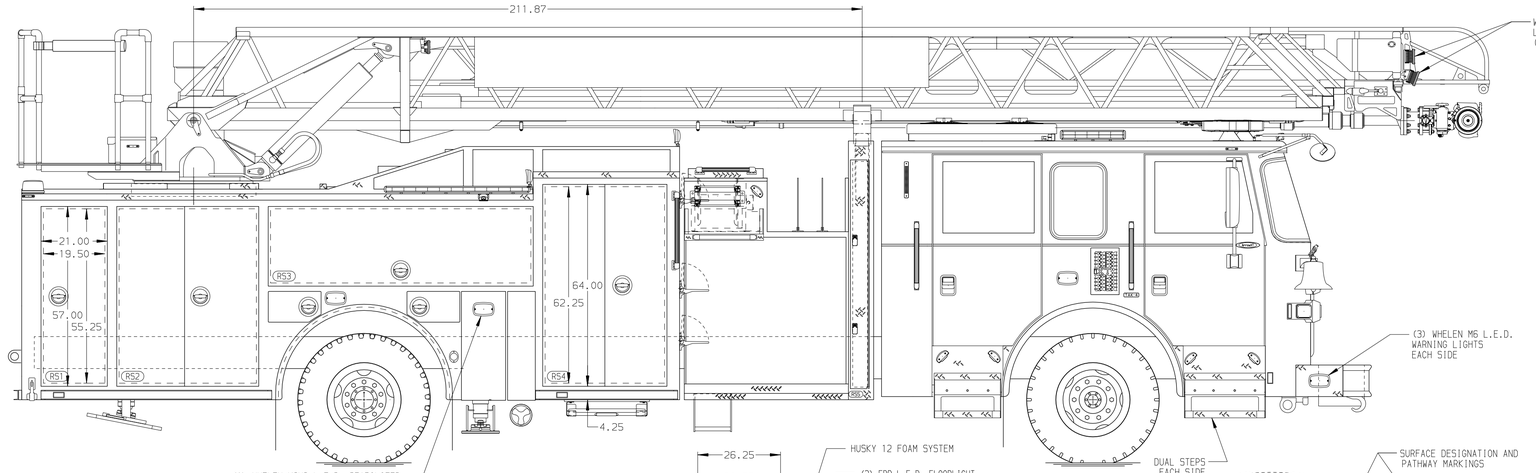

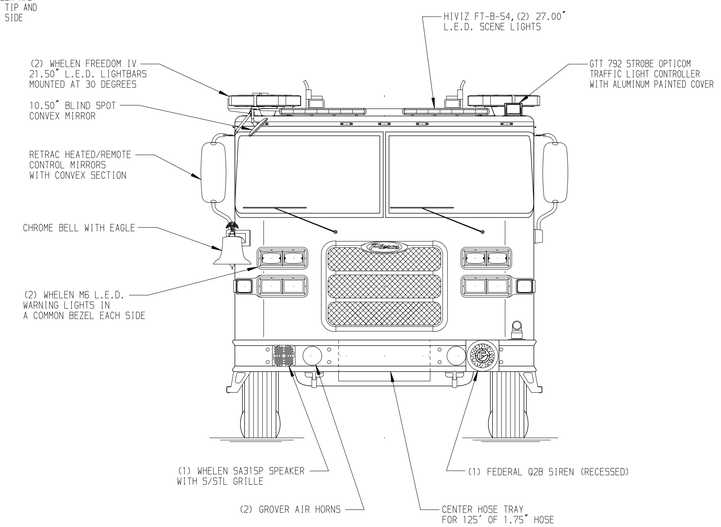

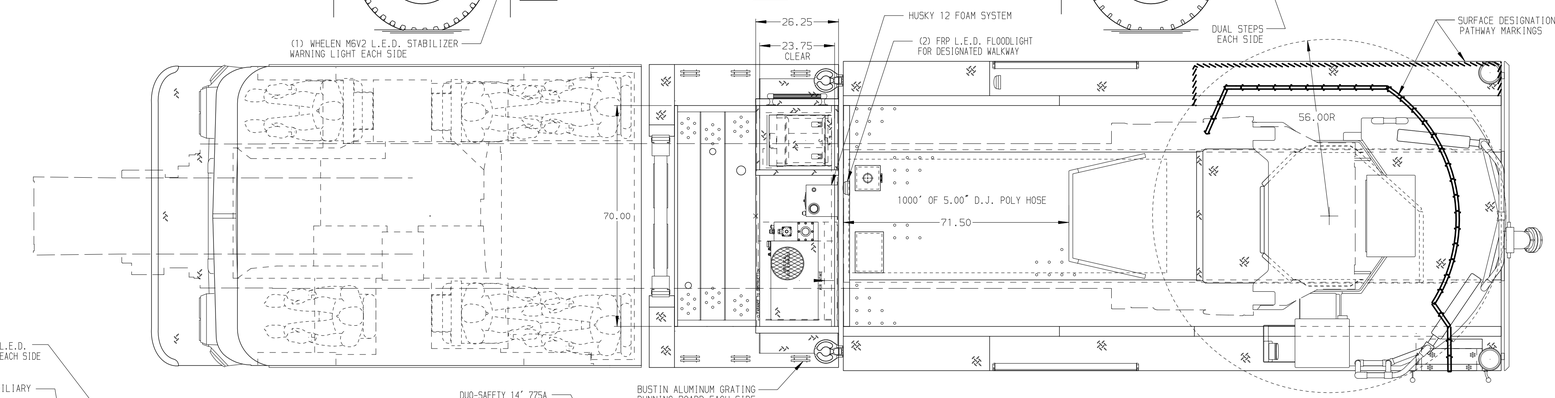

BODY	WATER TANK
107' ASL Aluminum Body	470 Gallon Poly Water Tank
COMPT,DRIVER SIDE FRONT	Foam System
Full Height Lap Forward	Husky 12 Single Agent Foam System
COMPT,DRIVER SIDE REAR	Foam Cell
Full Height Lap Rearward	30 Gallon Foam Cell, Reduced Water
COMPT,PASSENGER SIDE FRONT	
Full Height Lap Forward	
COMPT,PASSENGER SIDE REAR	
Full Height Lap Rearward	

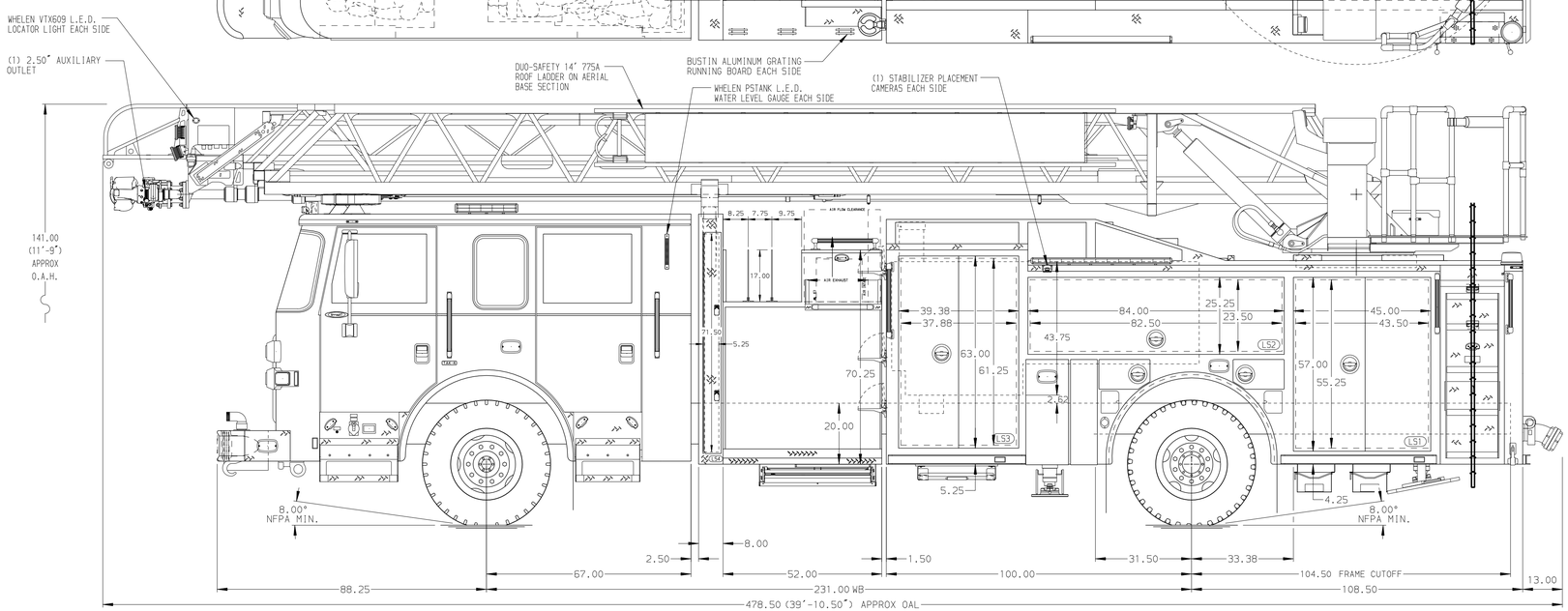

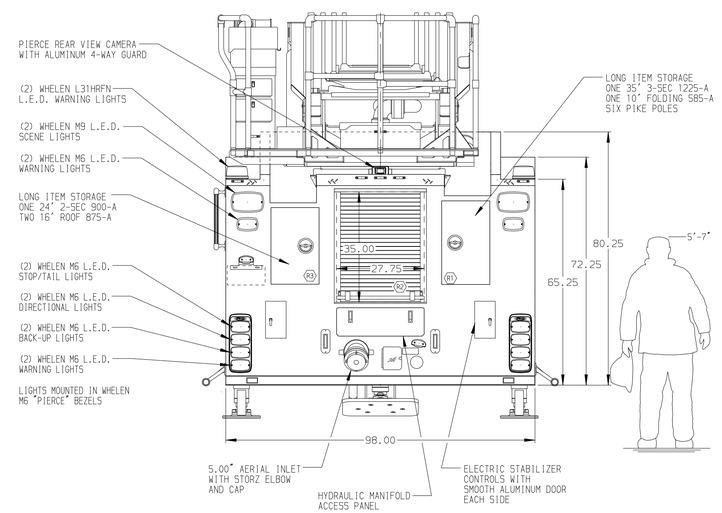

CHASSIS	CAB	AXLE,FRONT,CUSTOM	TRANSMISSION	PUMPHOUSE	CROSSLAYS,1.50"	SPEEDLAYS
Arrow XT Chassis	6700 Arrow XT Cab	24,000 Lb TAK-4 Axle	ALLison 5th Gen, 3000 EVS P	52" Control Zone Side Mount	(2) 1.50" Standard Capacity	Speedlays Not Required
ENGINE	BUMPER	AXLE,REAR		PUMP	CROSSLAYS,2.50"	GENERATOR
450 HP Cummins L9 Engine	19" Extended Stainless Steel	33,500 Lb Meritor Axle		1500 GPM Hale QMAX	(1) 2.50" Standard Capacity	Harrison 6kW MSV Hydraulic

NOTE

DIMENSIONS SHOWN ARE APPROXIMATE AND ARE SUBJECT TO MINOR DEVIATIONS AS MAY OCCUR OR BE NECESSARY IN CONSTRUCTION.
MINOR DETAILS NOT SHOWN.

1. ONE 2.50 OUTLET WITH 2.50 PIPING AND SWIVEL LOCATED ON LEFT SIDE OF THE FRONT BUMPER
2. SHORELINE RECEPTACLE LOCATED IN THE DRIVER SIDE STEPWELL
3. AIR INLET WITH DISCONNECT COUPLING IN THE DRIVER SIDE STEPWELL
4. BATTERY CHARGER LOCATED IN COMPARTMENT PER SHOP ORDER
5. BATTERY CHARGE INDICATOR LOCATED IN THE DRIVER SIDE STEPWELL
6. TEN ADJUSTABLE SHELVES IN COMPARTMENTS PER SHOP ORDER
7. ONE ADJUSTABLE SLIDE-OUT TRAY IN COMPARTMENT PER SHOP ORDER
8. THREE ALUMINUM MOUNTING PLATES IN COMPARTMENTS PER SHOP ORDER
9. THREE VERTICAL PARTITIONS IN COMPARTMENTS PER SHOP ORDER
10. ONE SWING-OUT ALUMINUM TOOL BOARD IN COMPARTMENT PER SHOP ORDER
11. ONE CTECH DRAWER ASSEMBLY IN COMPARTMENT PER SHOP ORDER
12. ONE 120V RECEPTACLE IN COMPARTMENT PER SHOP ORDER
13. CIRCUIT BREAKER PANEL LOCATED IN COMPARTMENT PER SHOP ORDER
14. DUAL L.E.D. LIGHT STRIPS LOCATED IN HOSE BED
15. NON-RAISED AERIAL PEDESTAL
16. AC POWER TO AERIAL TIP
17. 1500 GPM HIGH FLOW WATERWAY
18. REMOTE LADDER CONTROLS AT AERIAL TIP
19. REMOTE LADDER CONTROLS AT PUMP PANEL
20. REMOTE MONITOR CONTROLS AT PUMP PANEL
21. ONE AKRON ELECTRIC REWIND CORD REEL MODEL ERWC-15-10 WITH 200' OF 10/4 CABLE WITH CAPTIVE ROLLER ASSEMBLY AND 4-WAY ALUMINUM ENCLOSURE IN RIGHT SIDE OF CARGO AREA

MAXIMUM OVERALL HEIGHT = 141.00" (11'-9")

REV	DATE	BY	CH
1	25MAR19	TKA	KBO

CHASSIS DATA: MAKE PIERCE; MODEL ARROW-XT

Pierce MANUFACTURING INC.

TITLE: 107' ASCENDANT AERIAL LADDER AND BODY ASSEMBLY
FOR: SOUTH PORTLAND FIRE DEPARTMENT, SOUTH PORTLAND, MAINE
DWG NO.: 33764AD

JOB NO.	SCALE	DRAWN BY	CHECKED BY	SHEET SIZE	SHEET NO.
33764	1:24	TKA	CRI	D	1 OF 1

DATE: 12FEB19 / 18FEB19

View File Created 28-MAR-2019 08:39:53