# PUMPER

## BODY
Medium Stainless Steel 2nd Gen Pumper

## CHASSIS
Enforcer Chassis

# CHASSIS

## AXLE, FRONT, CUSTOM
19,500 lb TAK-4 Axle

## AXLE, REAR
27,000 lb Meritor Axle

## ENGINE
525 HP DD13 Engine

## TRANSMISSION
Allison 5th Gen, 4000 EVS P

## BUMPER
19" Extended Painted Steel

## CAB
7010 Enforcer Cab

# BODY

## WATER TANK
1000 Gallon New York Style Water Tank

## COMPT, PUMPER, REAR
30.75" FF Rollup 25.88" Deep Flush Rear Compt

## COMPT, PUMPER, LEFT SIDE
152" Rollup Full Height Front & Rear FDLER

## COMPT, PUMPER, RIGHT SIDE
152" Rollup Low FDLER

# FIRE SUPPRESSION

## PUMPHOUSE
48" Side Mount

## PUMP
2000 GPM Waterous CSU

## CROSSLAYS, 1.50"
(2) 1.50" Standard Capacity

## CROSSLAYS, 2.50"
2.50" Crosslay Not Required

## SPEEDLAYS
Speedlays Not Required

## GENERATOR
Generator Not Required

## Foam System
Husky 3 Single Agent Foam System

## Foam Cell
30 Gallon Foam Cell, Not Reduced Water

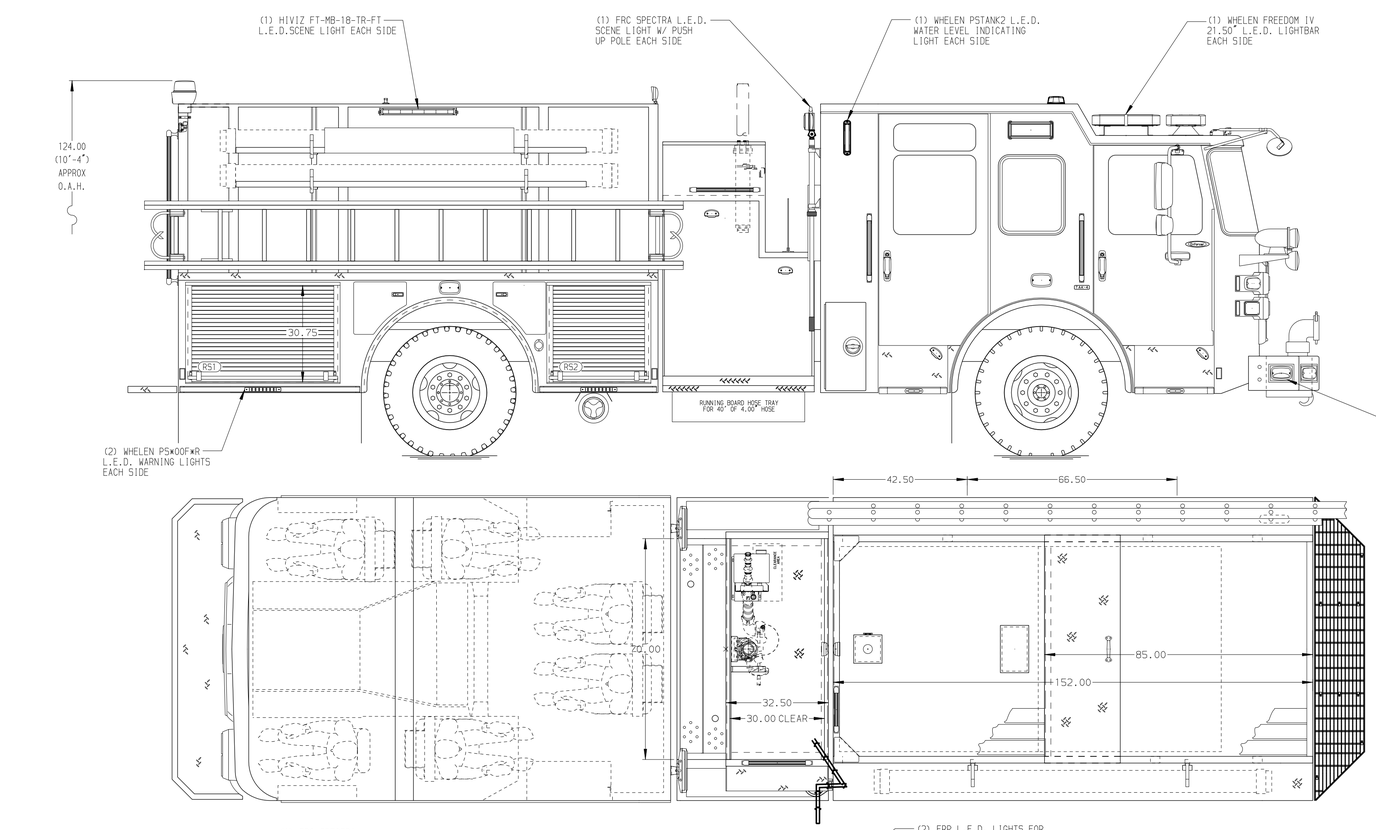


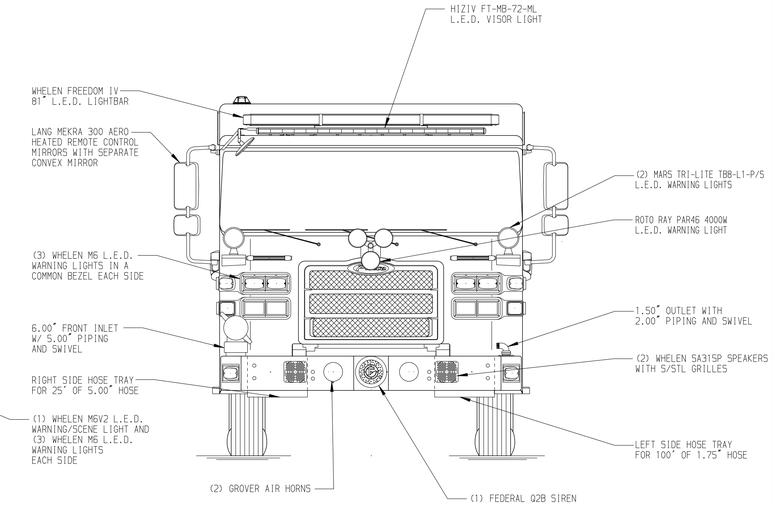


## HOSEBED CAPACITY

**BED 1**
400' OF 2.50" D.J. POLY HOSE

**BED 2**
1200' OF 5.00" D.J. POLY HOSE

**BED 3**
400' OF 1.75" D.J. POLY HOSE

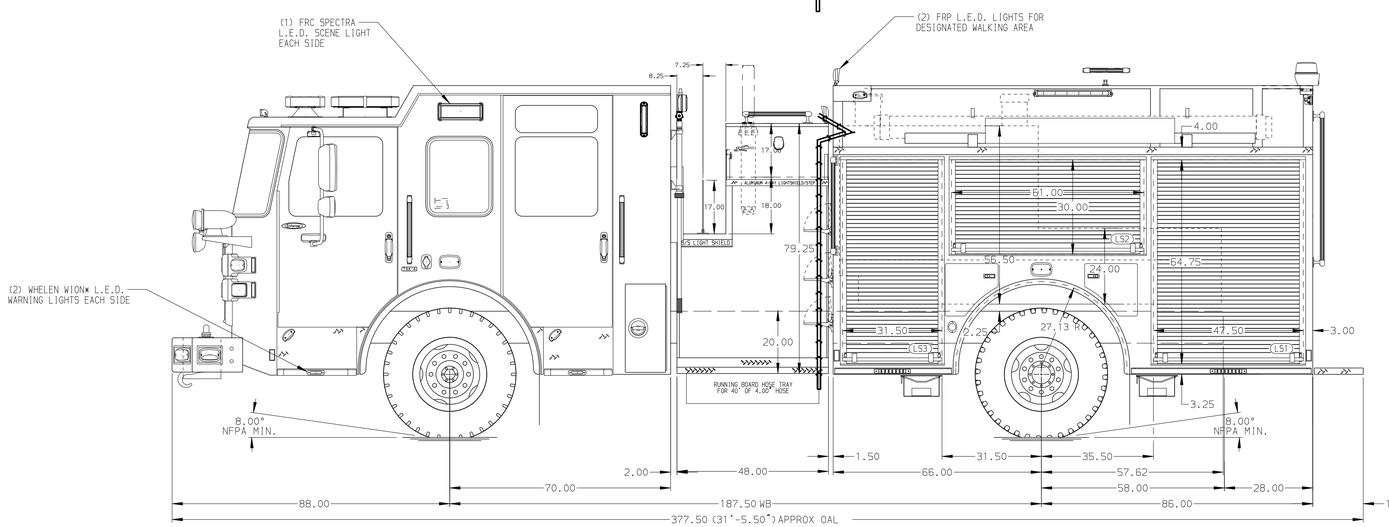


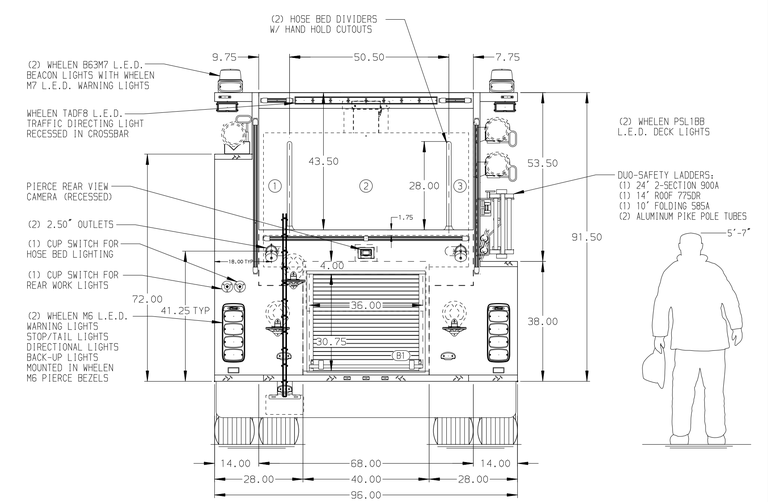


NOTE

DIMENSIONS SHOWN ARE APPROXIMATE AND ARE SUBJECT TO MINOR DEVIATIONS AS MAY OCCUR OR BE NECESSARY IN CONSTRUCTION.
MINOR DETAILS NOT SHOWN.

1. AUTOMATIC TIRE CHAINS
2. SHORELINE RECEPTACLE WITH KUSSMAUL SUPER AUTO-EJECT LOCATED ON DRIVER SIDE OF THE CAB
3. AIR INLET WITH DISCONNECT COUPLING IN THE DRIVER SIDE PUMP PANEL
4. BATTERY CHARGER LOCATED BEHIND DRIVER SEAT
5. BATTERY CHARGE INDICATOR DISPLAYED THROUGH DRIVER SIDE WINDOW
6. JUMPER STUDS LOCATED ON DRIVER SIDE PUMP PANEL
7. FIVE ADJUSTABLE SHELVES LOCATED PER SHOP ORDER
8. ONE FLOOR MOUNTED SLIDE-OUT TRAY LOCATED PER SHOP ORDER
9. FIVE 120V RECEPTACLES LOCATED PER SHOP ORDER
10. BOLT-IN PARTITIONS BETWEEN COMPARTMENTS LS1/B1 & RS1/B1

| REV | DATE | BY | CH |
|---|---|---|---|
| 7 | 08AUG19 | COL | PPE |
| 6 | 18JUN19 | KLE | KWI |
| 5 | 12APR19 | COL | PPE |
| 4 | 21MAR19 | COL | PPE |

CHASSIS DATA
MAKE: PIERCE
MODEL: ENFORCER

Pierce MANUFACTURING INC.

TITLE: Pierce Pumper Approval Drawing – 
FOR: Fairmount Fire Department – 
DWG NO.: 33772AD

| | |
|---|---|
| JOB NO. | 33772 |
| SCALE | 1:24 |
| DATE | |
| DRAWN BY | COL |
| DATE | 01MAR19 |
| CHECKED BY | KBO |
| DATE | 07MAR19 |
| SHEET SIZE | D |
| SHEET NO. | 1 OF 1 |

View File Created 09-AUG-2019 10:45:29