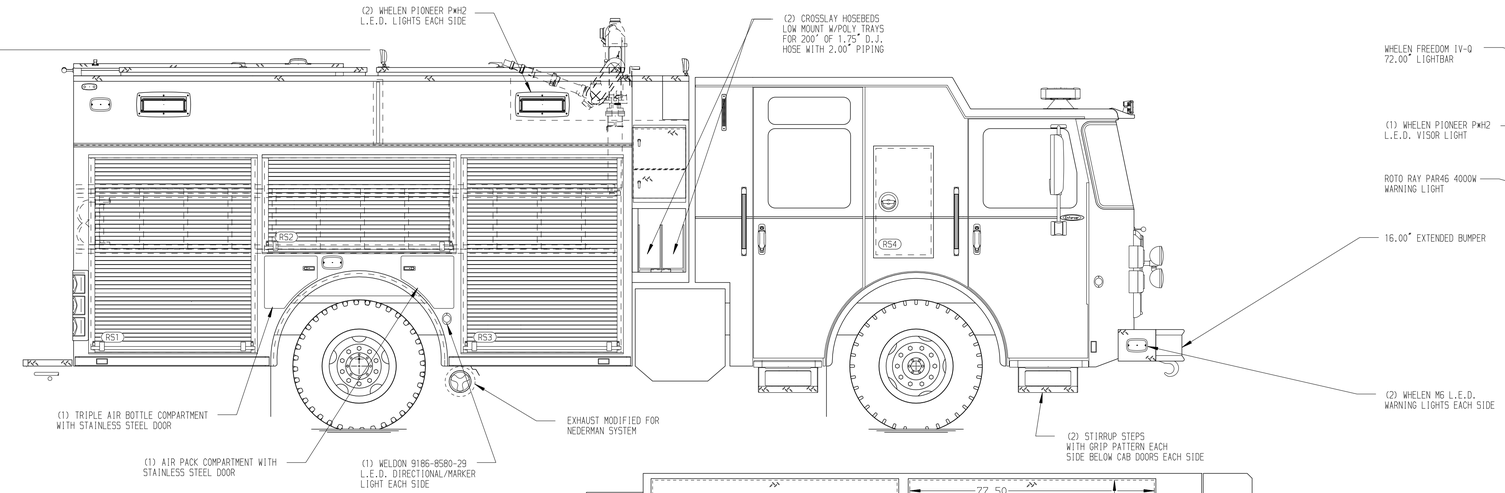

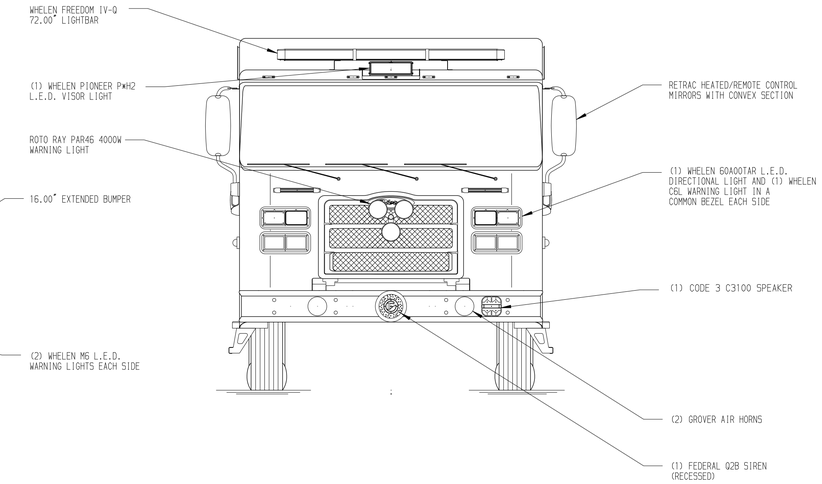

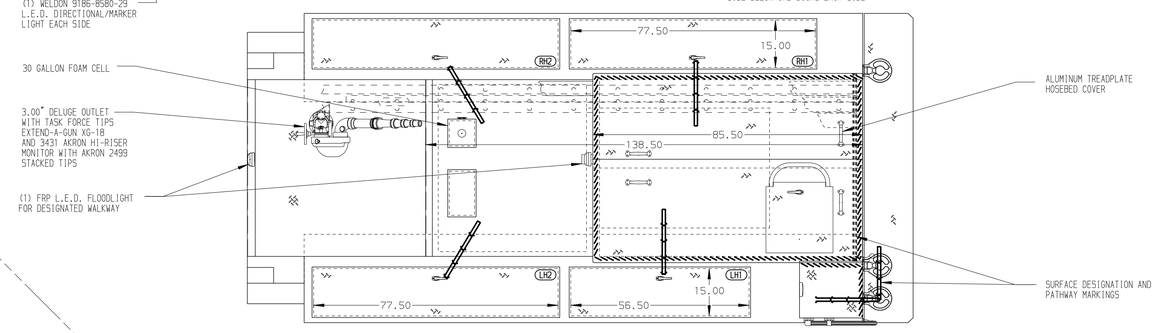

HOSEBED CAPACITIES

1. 100' OF 1.75" D.J. POLY HOSE
2. 800' OF 3.00" D.J. POLY HOSE
3. 1000' OF 5.00" D.J. POLY HOSE

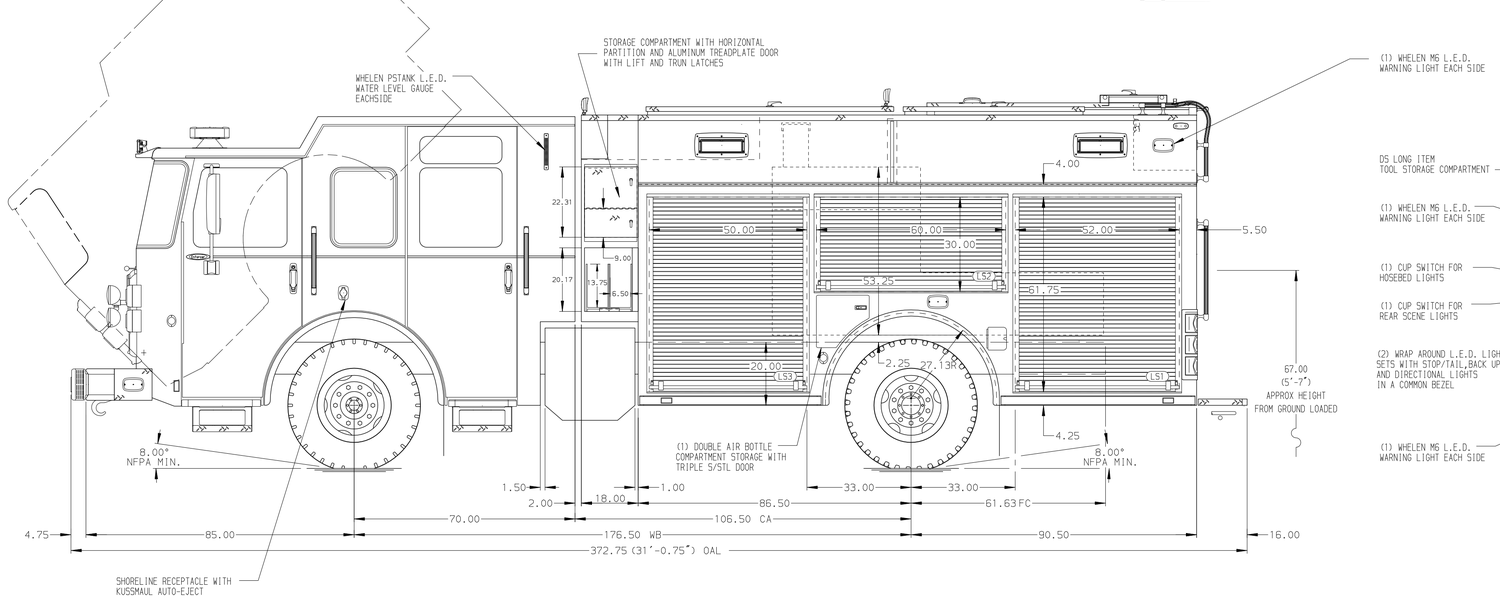

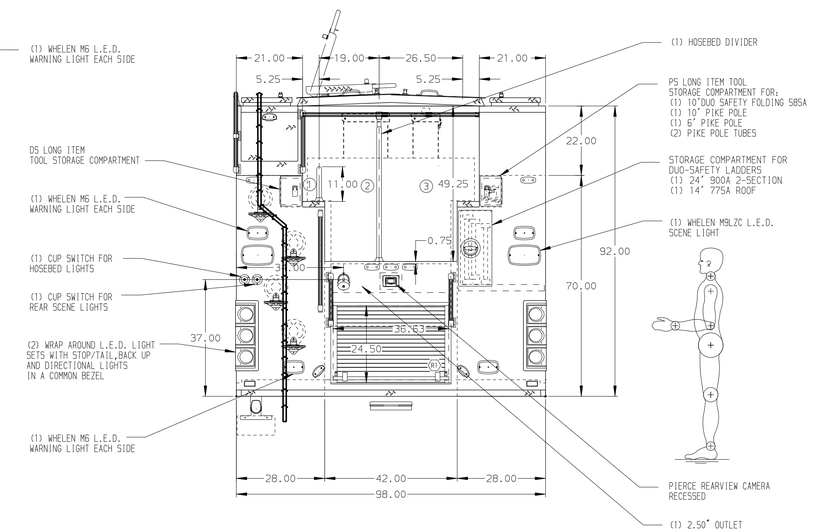

ALUMINUM BODY

NOTE

DIMENSIONS SHOWN ARE APPROXIMATE AND ARE SUBJECT TO MINOR DEVIATIONS AS MAY OCCUR OR BE NECESSARY IN CONSTRUCTION.
MINOR DETAILS NOT SHOWN.

1. VOGEL LUBE SYSTEM PUMP LOCATED PER SHOP ORDER
2. BATTERY CHARGER/COMPRESSOR LOCATED IN COMPARTMENT LS3
3. DUAL L.E.D. LIGHT STRIPS LOCATED IN HOSE BED
4. ONE FULL WIDTH/DEPTH ADJUSTABLE SHELF IN COMPARTMENT LS1, LS2, RS1, & RS3
5. ONE FLOOR MOUNTED SLIDE-OUT TRAY IN COMPARTMENT LS1 & RS1
6. ZIAMATIC SCBA HOLDER BRACKET LOCATED IN COMPARTMENT RS2
7. ALL FOLDING STEPS TO BE TRIDENT WITH INTEGRATED L.E.D. LIGHT UNLESS SPECIFIED
8. 120V DUPLEX RECEPTACLE LOCATED
9. AIR OUTLET WITH SHUT OFF VALVE LOCATED ON DS PUMP PANEL
10. WHEEL CHOCKS SHIPPED LOOSE

REV	DATE	BY	CH
1	24JUN19	MMF	MSA
2	07JUN19	MMF	MSA

CHASSIS DATA
MAKE: PIERCE
MODEL: ENFORCER

Pierce MANUFACTURING INC.

TITLE: 1500-D-530P,500 GAL WATER W/30 GAL FOAM, 177" RESCUE (2) CROSSLAYS, LADDERS THRU BODY, DELUGE

FOR: ROCKFORD FIRE DEPARTMENT
ROCKFORD, ILLINOIS

DWG NO.: 33835AD

JOB NO.	33835 01-03
SCALE	1:24
DATE	25APR19
DRAWN BY	MMF
CHECKED BY	NPE
SHEET SIZE	D
SHEET NO.	1 OF 1

View File Created 24-JUN-2019 12:54:31