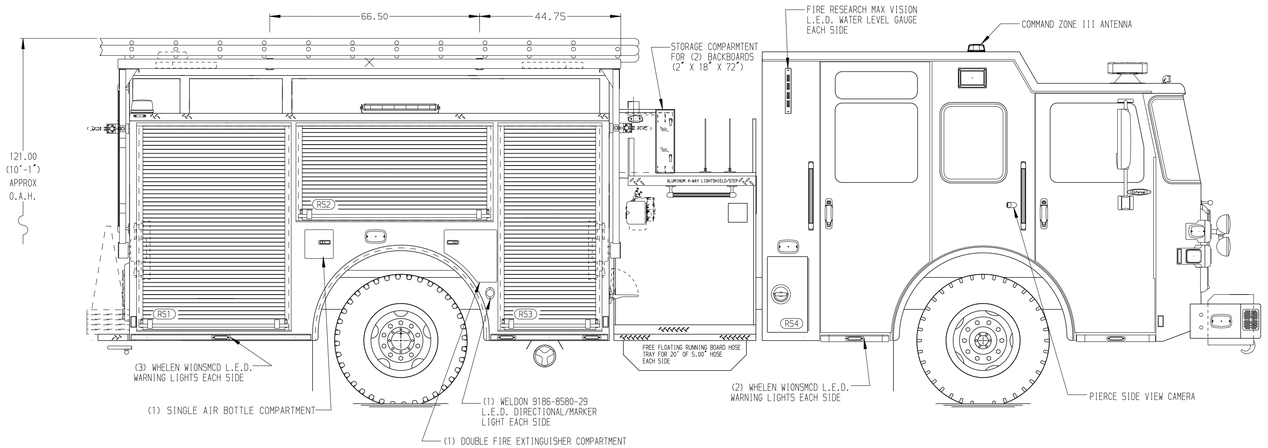

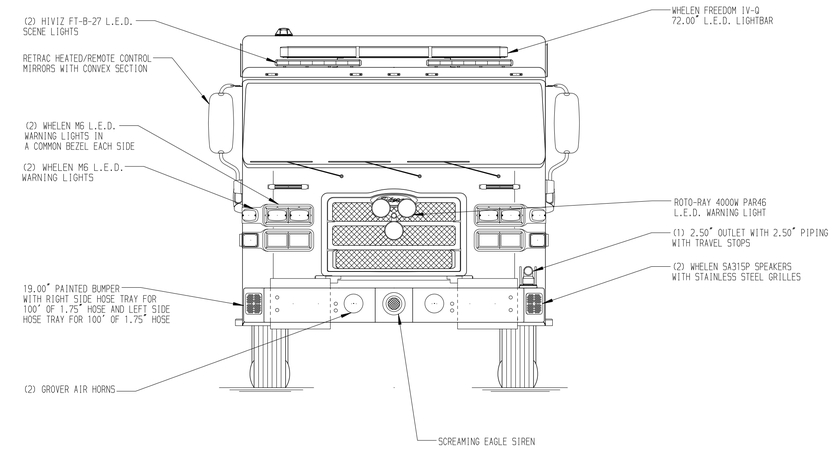

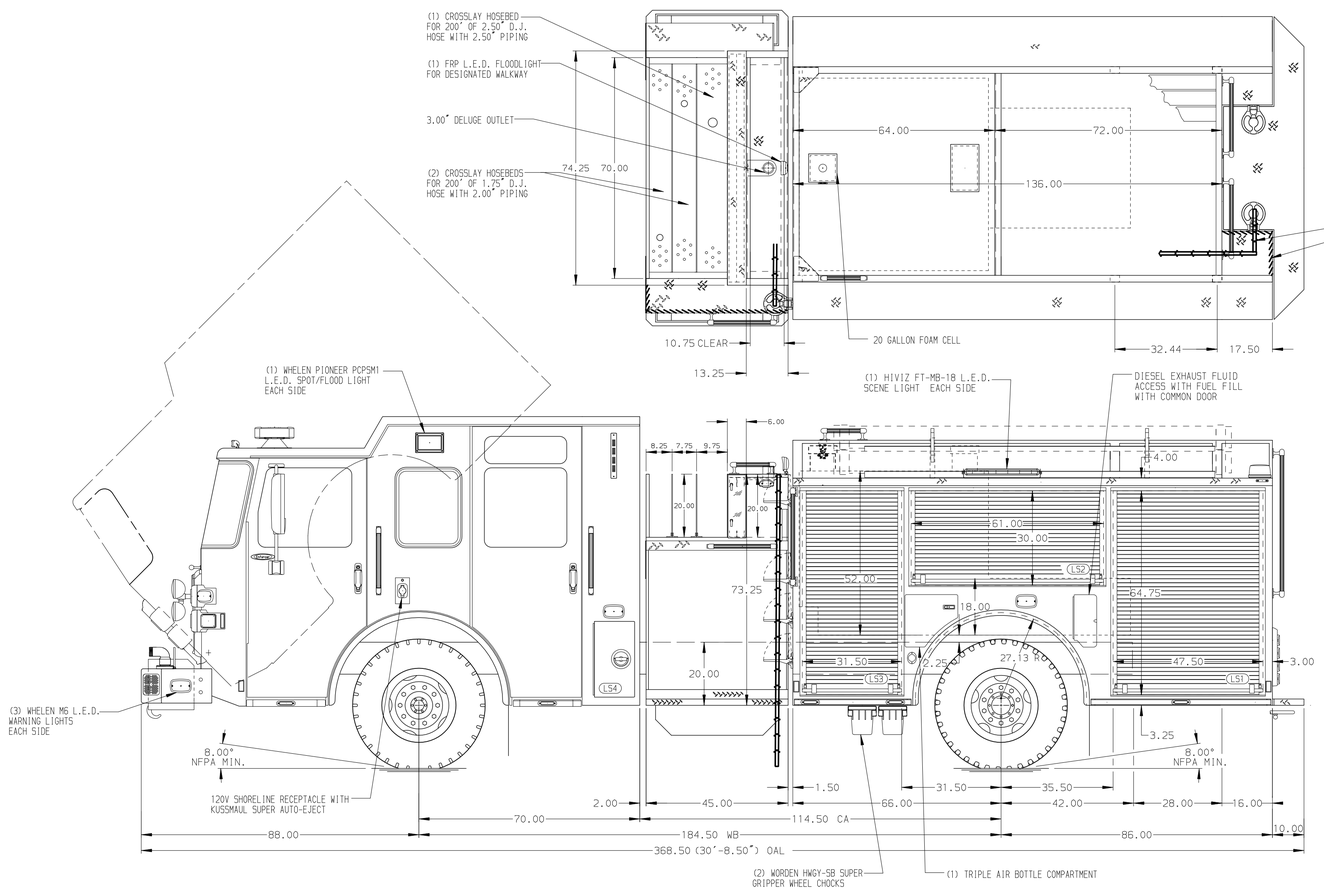

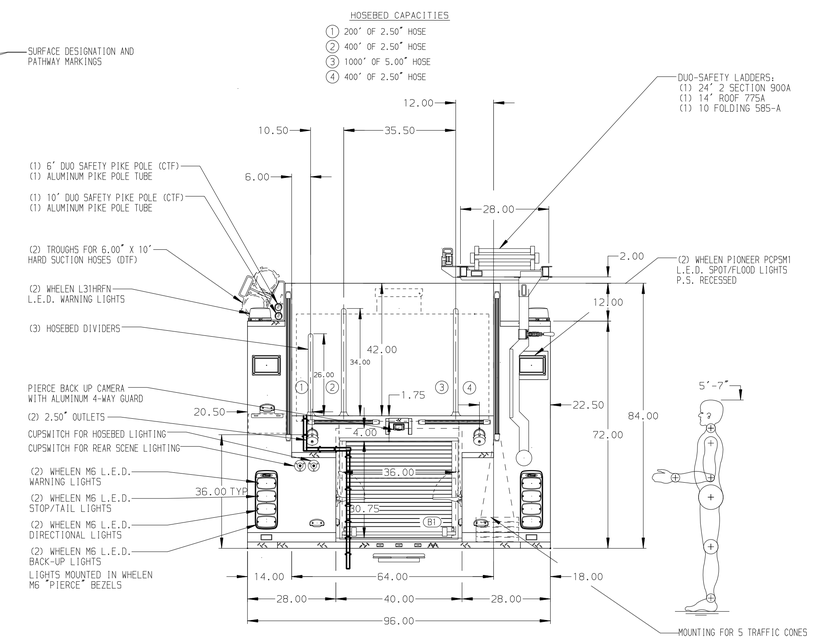

ALUMINUM BODY

SIDE ROLL AND FRONTAL IMPACT PROTECTION

NOTE

DIMENSIONS SHOWN ARE APPROXIMATE AND ARE SUBJECT TO MINOR DEVIATIONS AS MAY OCCUR OR BE NECESSARY IN CONSTRUCTION.
MINOR DETAILS NOT SHOWN.

1. ONSPOT AUTOMATIC TIRE CHAINS TO BE PROVIDED AT REAR
2. AIR INLET WITH DISCONNECT COUPLING ON D.S. STEP WELL
3. DUAL L.E.D. LIGHT STRIPS LOCATED IN HOSE BED
4. DRIP PAN GUARD FOR ROLL-UP DOOR IN LS1, LS2, LS3, B1, RS1, RS2, AND RS3
5. ADJUSTABLE FULL WIDTH DEPTH SHELVES TWO IN RS1 AND RS3 AND ONE IN LS1 AND LS3
6. ONE FLOOR MOUNTED SLIDE-OUT TRAY IN B1 AND RS1
7. SWING-OUT TOOL BOARD WITH PEGBOARD PATTERN IN RS2
8. VANNER LIFE STAR INVERTER/BATTERY CHARGER IN LS3
9. ONE ZICO SCBA BOTTLE HOLDER IN LS3
10. ONE 120V 6-PLACE RECEPTACLE STRIP IN EMS COMPARTMENT
11. ONE 120V DUPLEX RECEPTACLE IN LS1 AND RS1

REV	DATE	BY	CH
D	27JUN19	LST	MSA
C	17JUN19	MTM	EFA
B	22MAY19	LST	MSA
A	26APR19	GVH	AZA

CHASSIS DATA — MAKE: PIERCE — MODEL: ENFORCER

Pierce MANUFACTURING INC.

TITLE: 2000-D-720P, 700 GAL OF WATER W/ 20 GAL FOAM CELL 152" BODY, HYDRAULIC LADDER RACK, (3) X-LAYS

FOR: CITY OF MILTON, MILTON, GEORGIA

DWG NO.: 33841AD

JOB NO.	33841 01-02
SCALE	1:24
DATE	
DRAWN BY	LST 18APR19
CHECKED BY	AZA 23APR19
SHEET SIZE	D
SHEET NO.	1 OF 1

View File Created 27-JUN-2019 14:24:16