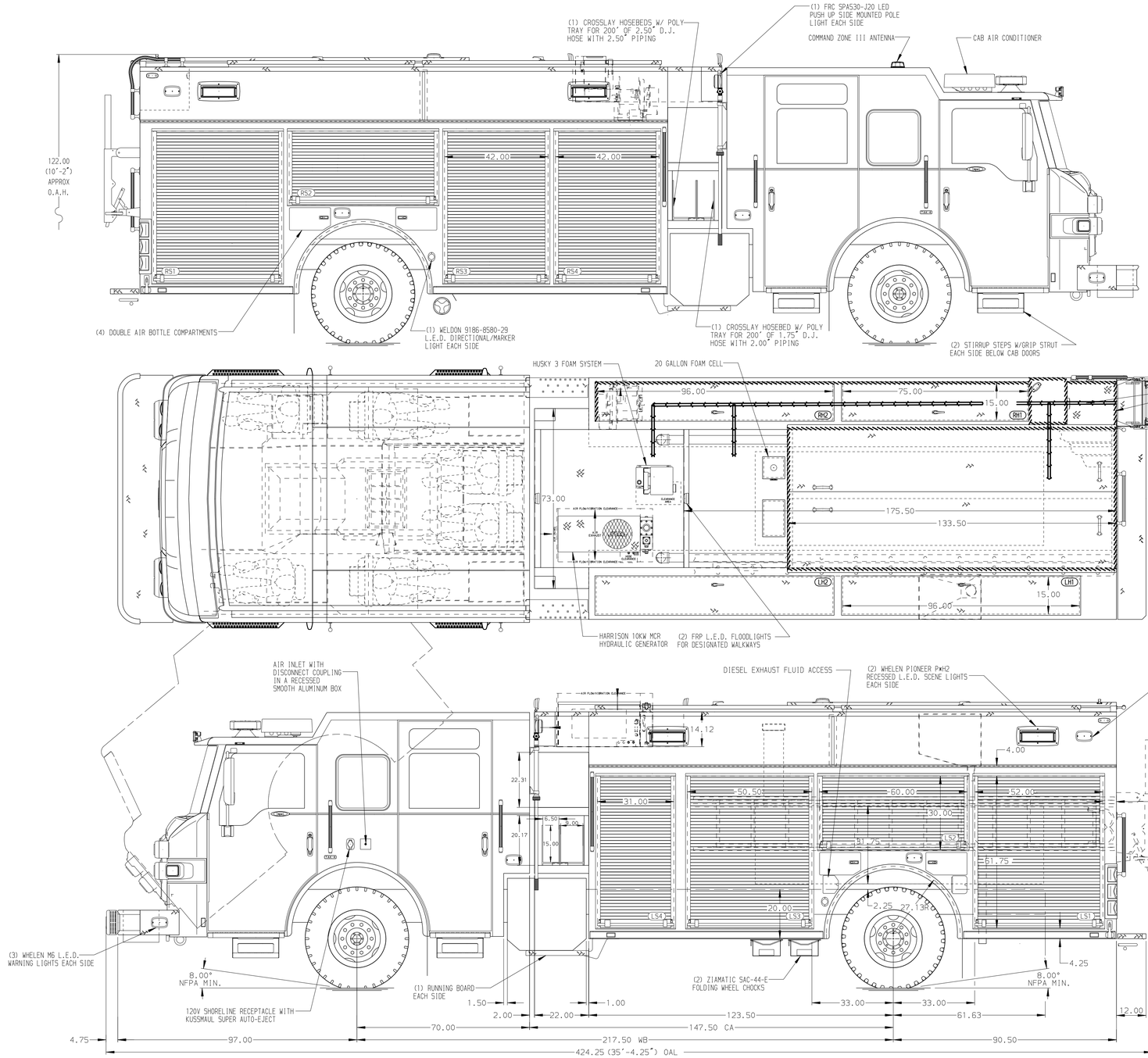

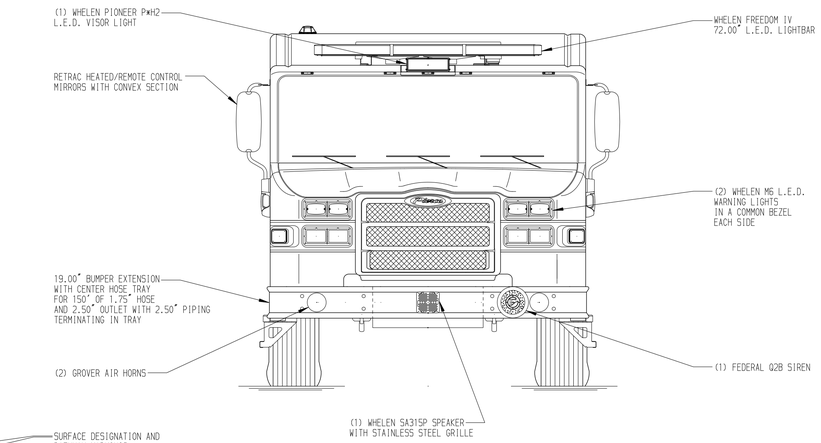

SURFACE DESIGNATION AND PATHWAY MARKINGS

HOSEBED CAPACITIES

1. 500' OF 2.50" HOSE
2. 800' OF 4.00" HOSE
3. 300' OF 3.00" HOSE

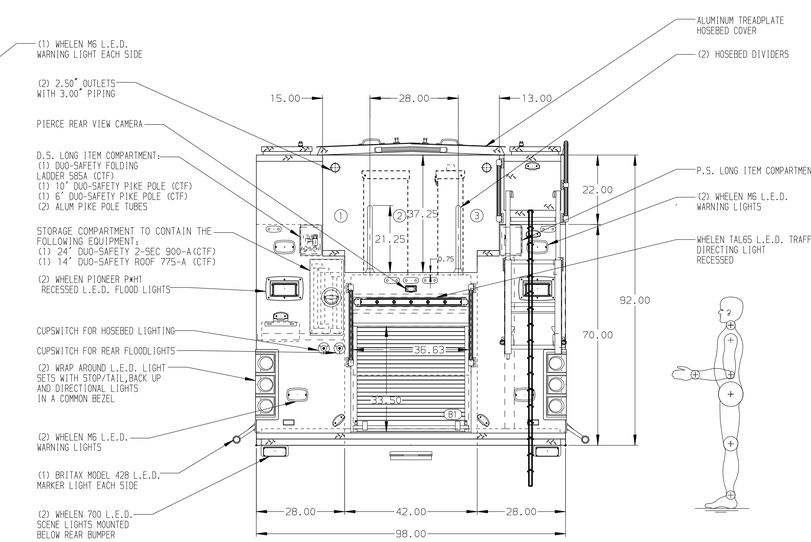

ALUMINUM BODY

SIDE ROLL AND FRONTAL IMPACT PROTECTION

NOTE

DIMENSIONS SHOWN ARE APPROXIMATE AND ARE SUBJECT TO MINOR DEVIATIONS AS MAY OCCUR OR BE NECESSARY IN CONSTRUCTION.
MINOR DETAILS NOT SHOWN.

1. BATTERY CHARGER INDICATOR LOCATED AT DRIVER'S SIDE STEP AREA
2. DUAL L.E.D. LIGHT STRIPS LOCATED IN HOSE BED
3. 120V 6-PLACE RECEPTACLE STRIP ON THE DRIVER'S SIDE TOP OF THE ENGINE TUNNEL

REV	DATE	BY	CH
V	19AUG19	LST	DTS
B	23JUL19	LST	DTS
V	13JUN19	KLE	KWI

CHASSIS DATA — MAKE: PIERCE — MODEL: IMPEL

TITLE: 1500-D-520P, 500 GAL OF WATER W/ 20 GAL FOAM CELL 214" PUC RESCUE, LADDERS THRU BODY, (3) X-LAYS

FOR: GLENVILLE FIRE DISTRICT 7/THOMAS CORNERS GLENVILLE, NEW YORK

DWG NO.: 33846AD-SH1

Pierce MANUFACTURING INC.

JOB NO.	33846
SCALE	1:24
DATE	
DRAWN BY	LST 26APR19
CHECKED BY	KOU 29APR19
SHEET SIZE	D
SHEET NO.	1 OF 2

View File Created 19-AUG-2019 09:35:26