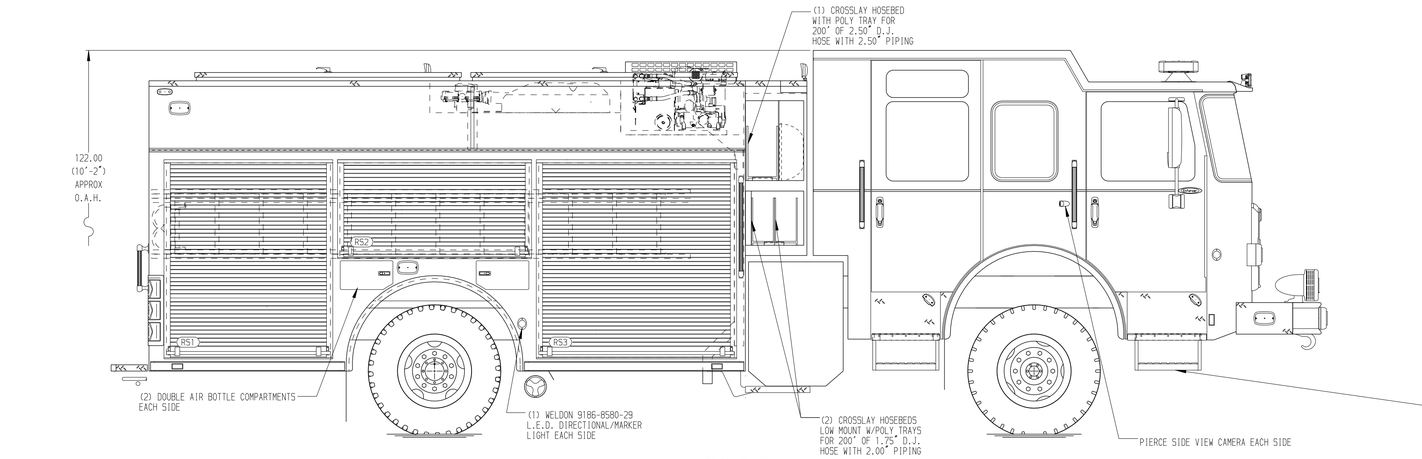

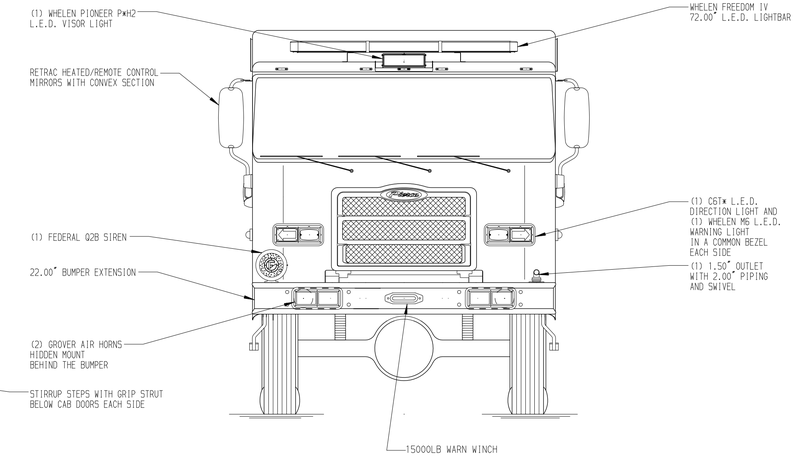

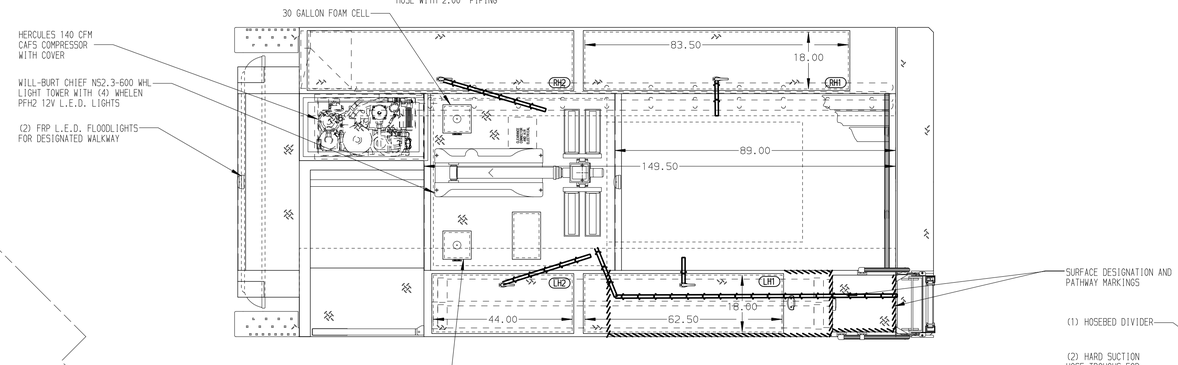

HOSEBED CAPACITIES

1. 500' OF 2.50" HOSE
2. 1000' OF 5.00" HOSE

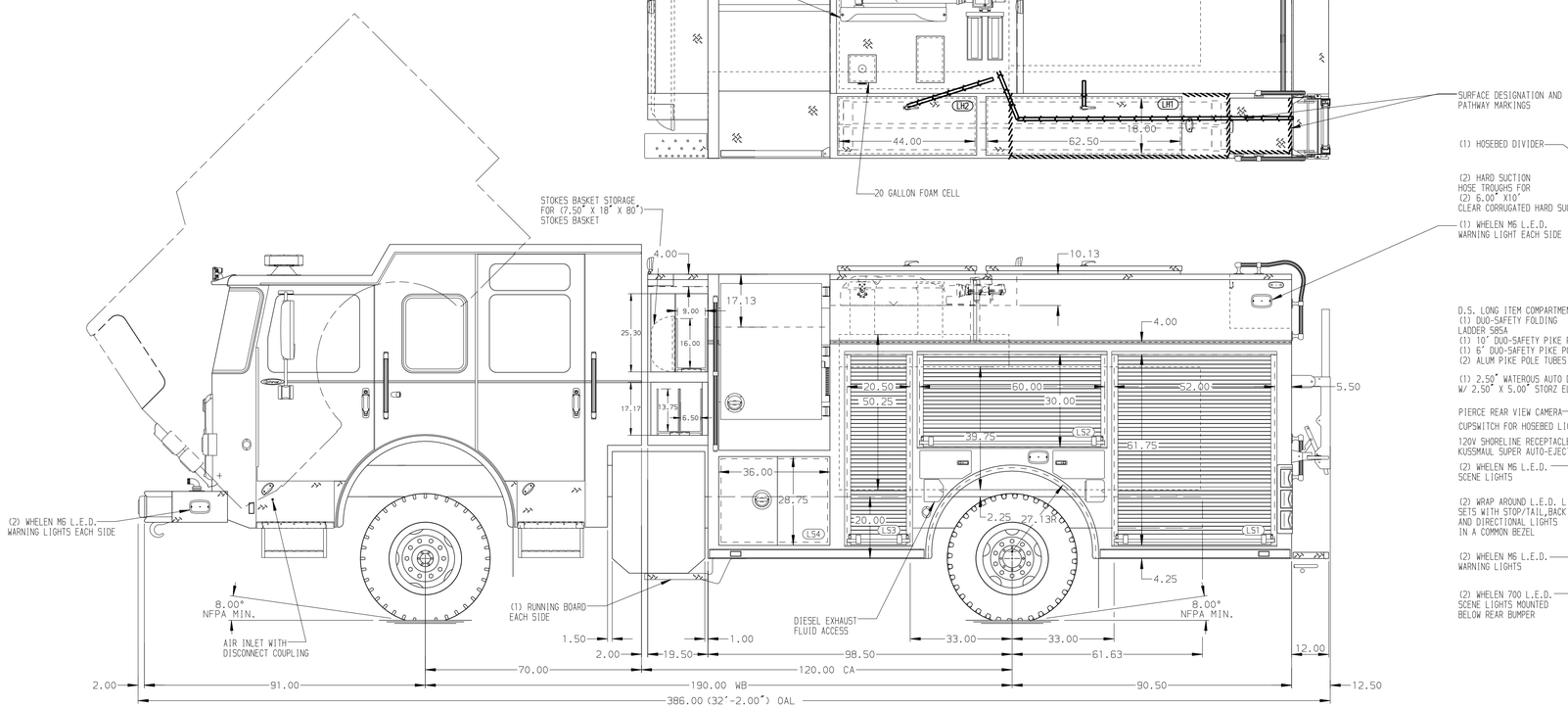

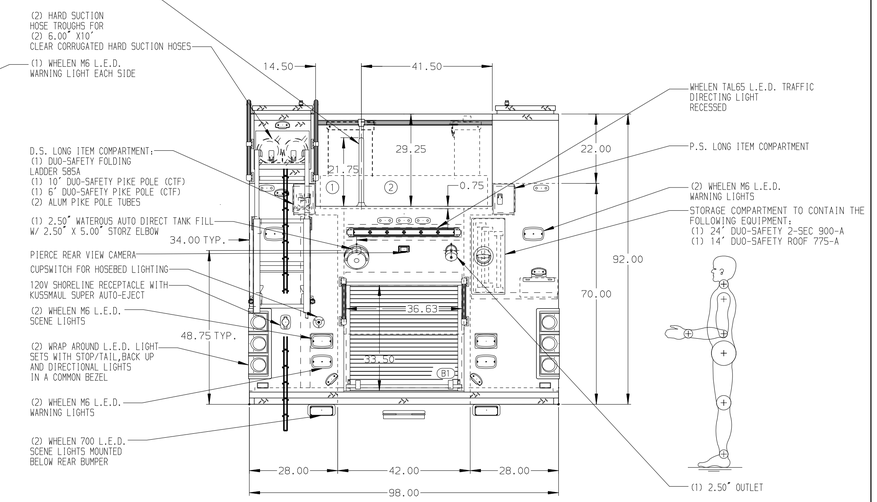

ALUMINUM BODY

SIDE ROLL AND FRONTAL IMPACT PROTECTION

NOTE

DIMENSIONS SHOWN ARE APPROXIMATE AND ARE SUBJECT TO MINOR DEVIATIONS AS MAY OCCUR OR BE NECESSARY IN CONSTRUCTION.
MINOR DETAILS NOT SHOWN.

1. (2) WORDEN HWGY-SB SUPER GRIPPER WHEEL CHOCKS AND BRACKETS SHIPPED LOOSE
2. BATTERY CHARGER/COMPRESSOR LOCATED BEHIND THE DRIVER'S SEAT
3. BATTERY CHARGER INDICATOR LOCATED ON DRIVER'S SEAT RISER
4. JUMPER STUDS AT DRIVER SIDE CAB STEP
5. DUAL L.E.D. LIGHT STRIPS LOCATED IN HOSE BED
6. TWO FULL WIDTH/DEPTH ADJUSTABLE SHELVES IN LS3 AND RS1 AND ONE IN RS3
7. ONE FLOOR MOUNTED SLIDE-OUT TRAY IN LS1, B1, AND RS3
8. 100# OIL DRY HOPPER LOCATED IN RH2
9. HUSKY 12 FOAM SYSTEM
10. ONE ADJUSTABLE TILT/SLIDE-OUT TRAY IN LS2 AND RS2
11. TWO SLIDE-OUT ALUMINUM TOOLBOARDS WITH PEG BOARD IN RS1
12. ONE VERTICAL PARTITION IN LS1 AND RS1
13. ALUMINUM PEGBOARD W/ TRACK ON THE BACK WALL OF LS1 AND RS3

REV	DATE	BY	CH
5	18SEP19	LST	CSH
4	29JUL19	LST	DTS
3	21JUN19	LST	DTS
2	13JUN19	KLE	KWI
1	10MAY19	LST	AZA

CHASSIS DATA
MAKE: PIERCE
MODEL: ENFORCER

Pierce MANUFACTURING INC.

TITLE: 1500-D-750P, 700 GAL OF WATER W/ 50 GAL OF FOAM 189" PUC RESCUE, LADDERS THRU BODY, (3) CROSSLAYS
FOR: STANFORD FIRE COMPANY # 1 INC. STANFORDVILLE, NEW YORK
DWG NO.: 33847AD

JOB NO.	33847
SCALE 1:24	DATE
DRAWN BY LST	01MAY19
CHECKED BY AZA	07MAY19
SHEET SIZE D	SHEET NO. 1 OF 1

View File Created 18-SEP-2019 08:56:30