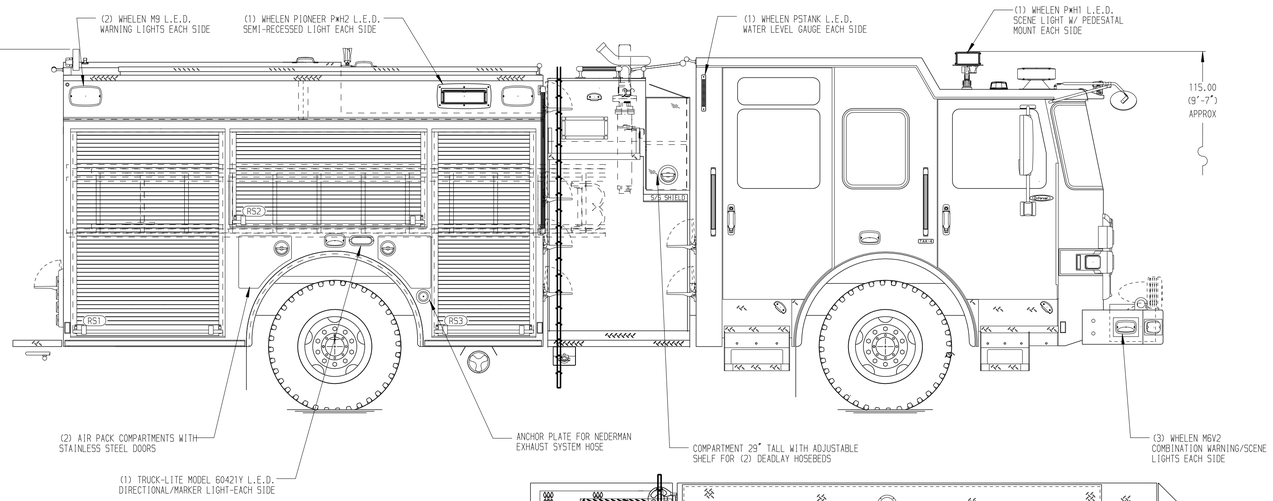

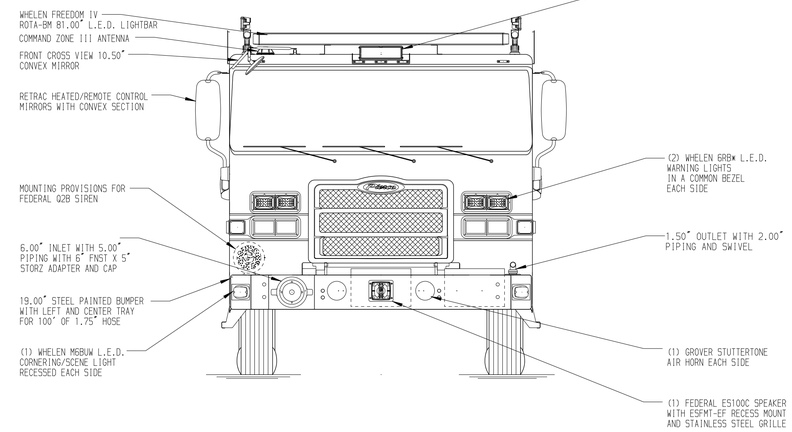

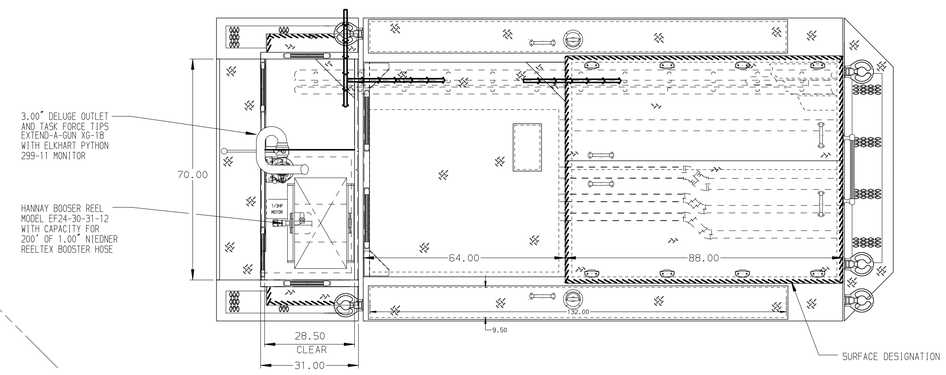

HOSEBED CAPACITIES

1. 100' of 1.75" D.J. POLY HOSE
2. 100' OF 2.50" D.J. POLY HOSE
3. 200' OF 1.75" D.J. POLY HOSE
4. 200' OF 1.75" D.J. POLY HOSE
5. 250' OF 1.75" D.J. POLY HOSE
6. 700' OF 2.50" D.J. POLY HOSE
7. 800' OF 5.00" D.J. POLY HOSE

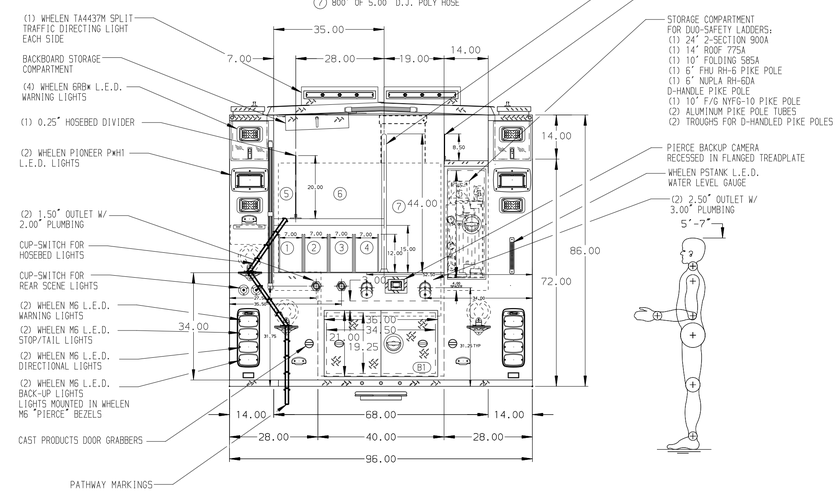

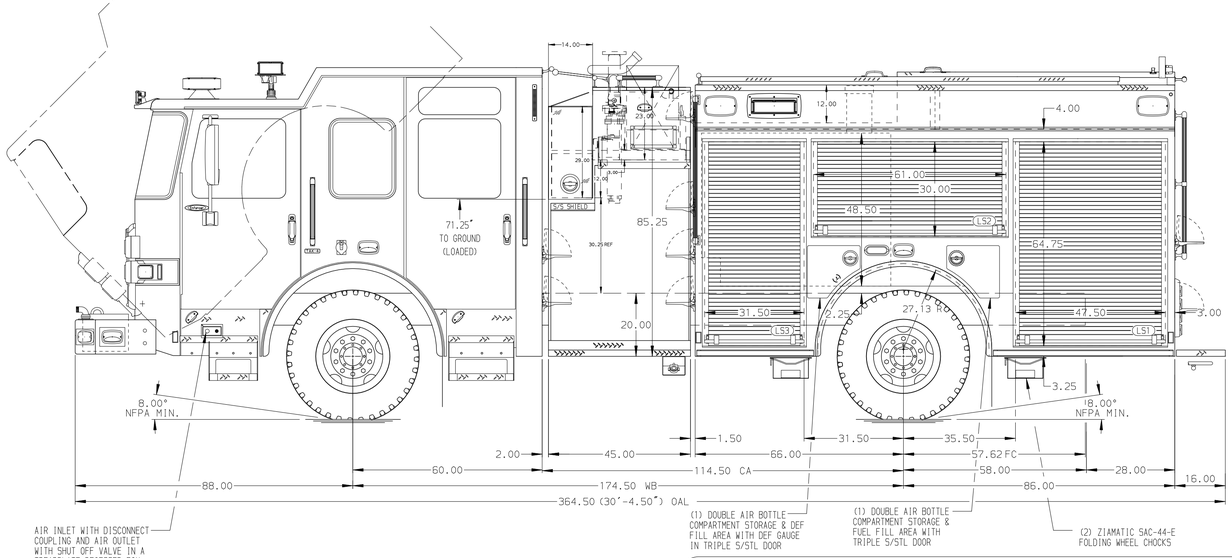

ALUMINUM BODY

SIDE ROLL & FRONTAL IMPACT PROTECTION

NOTE

DIMENSIONS SHOWN ARE APPROXIMATE AND ARE SUBJECT TO MINOR DEVIATIONS AS MAY OCCUR OR BE NECESSARY IN CONSTRUCTION.
MINOR DETAILS NOT SHOWN.

1. RUD AUTOMATIC TIRE CHAINS TO BE PROVIDED AT REAR
2. S/S SCUFFPLATES AT CAB DOOR JAMBS
3. BATTERY CHARGER/COMPRESSOR LOCATED BEHIND DRIVER'S SEAT
4. DUAL L.E.D. LIGHT STRIPS LOCATED IN HOSE BED
5. S/S DRIP PAN GUARD LOCATED IN COMPARTMENT LS1, LS2, LS3, RS1, RS2 & RS3
6. ONE ADJUSTABLE FULL WIDTH/DEPTH SHELF IN COMPARTMENT LS1, LS2, RS2; TWO IN RS1, RS3; THREE IN LS3
7. ONE FLOOR MOUNTED SLIDE-OUT TRAY IN COMPARTMENT LS3 & B1
8. TWO ZIAMATIC SCBA HOLDER BRACKETS SHIPPED LOOSE
9. 4-WAY ALUMINUM ON THE FLOOR OF COMPARTMENT LS1, LS3, RS1 & RS3

REV	DATE	BY	CH
3	19AUG19	LME	MSA
2	18JUL19	LME	MSA
1	13MAY19	BST	WKL

CHASSIS DATA
MAKE: PIERCE
MODEL: ENFORCER

Pierce MANUFACTURING INC.

TITLE: 1500-D-500P GALLON TANK, 152" PUMPER BODY MILWAUKEE STYLE TANK, SPCL REAR COMPARTMENT
FOR: CITY OF BELLINGHAM BELLINGHAM, WASHINGTON
DWG NO.: 33852AD

JOB NO.	33852
SCALE	1:24
DATE	
DRAWN BY	LME 03MAY19
CHECKED BY	WKL 03MAY19
SHEET SIZE	D
SHEET NO.	1 OF 1

View File Created 23-AUG-2019 15:05:54