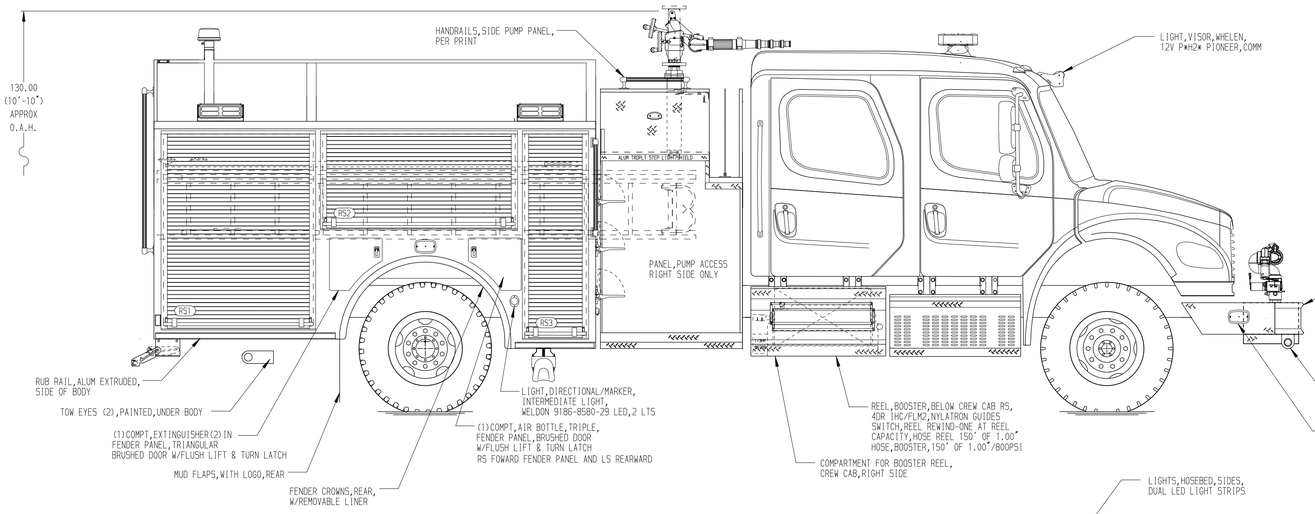

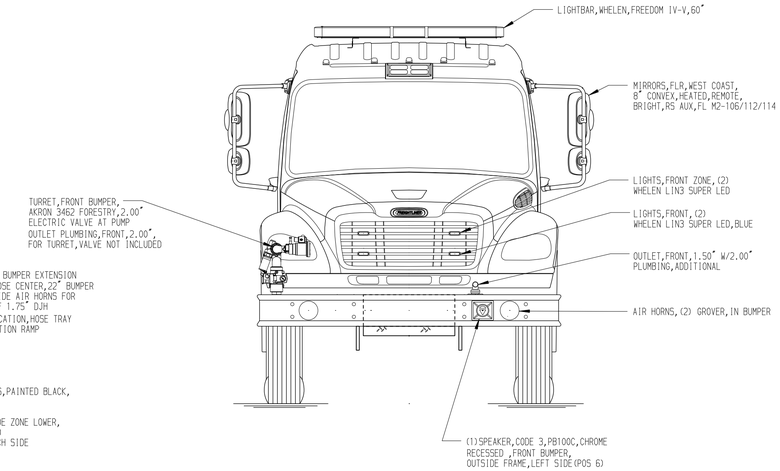

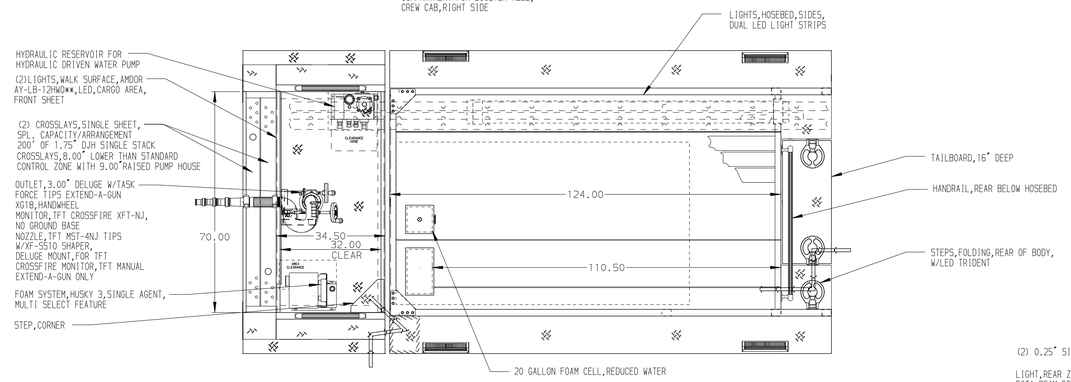

HOSEBED CAPACITIES

1. 200' OF 2.50" D.J. POLY HOSE (PRE-CONNECT)
2. 500' OF 2.50" D.J. POLY HOSE
3. 1000' OF 4.00" D.J. POLY HOSE

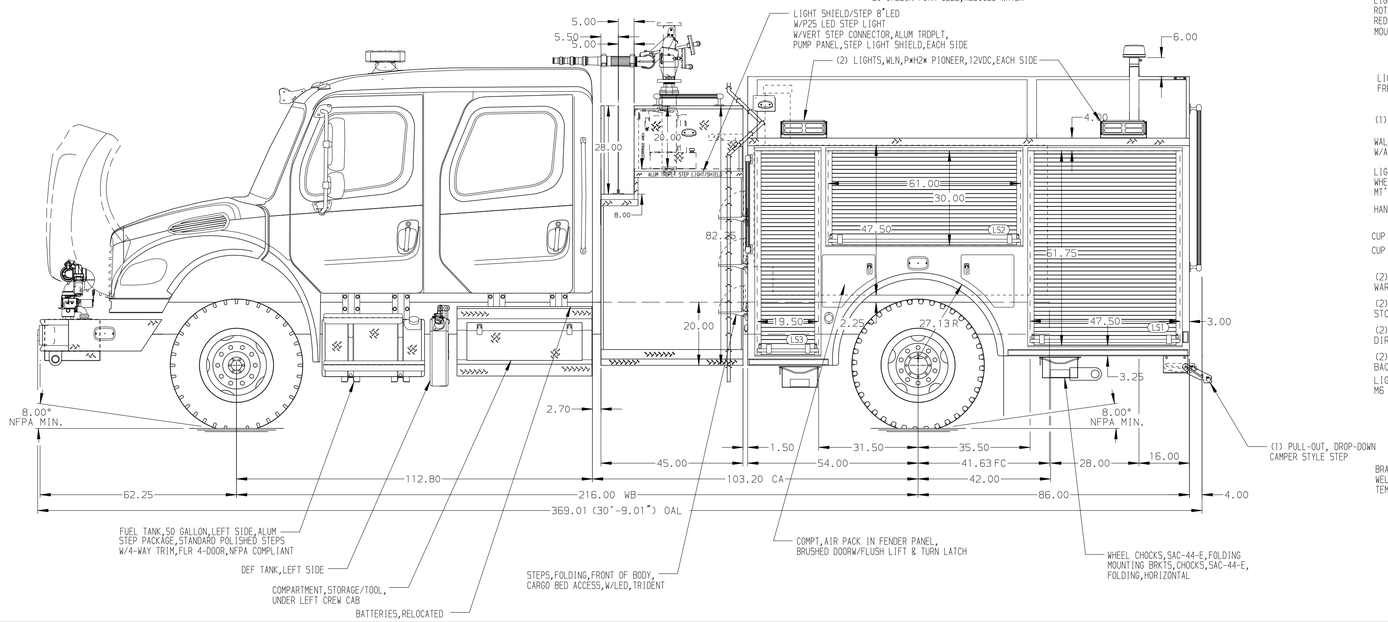

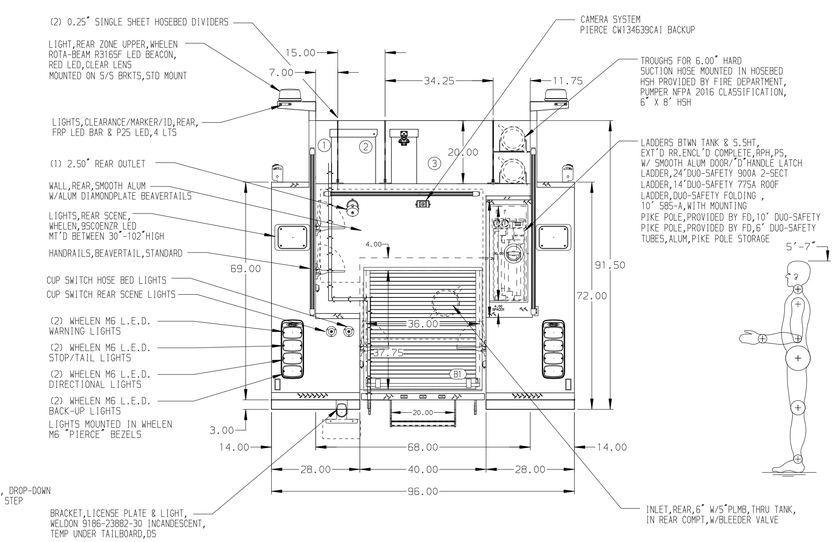

ALUMINUM BODY

NOTE

DIMENSIONS SHOWN ARE APPROXIMATE
AND ARE SUBJECT TO MINOR DEVIATIONS
AS MAY OCCUR OR BE NECESSARY IN
CONSTRUCTION.
MINOR DETAILS NOT SHOWN.

REV	DATE	BY	CH
7	05NOV19	RHU	AJA
6	09OCT19	JLA	AJA
5	16AUG19	JLA	RWI

CHASSIS DATA
MAKE: FL
MODEL: M2-106

Pierce MANUFACTURING INC.

TITLE: 1250-D-730P,20 FOAM,140" BDY, LS & RS FULL HGT
45"SIDE CONTROL,(2)1.5"CROSSLAYS,3.0" RAISED REAR

FOR: PLEASANT HILL FIRE PROTECTION
EUGENE OREGON

DWG NO.: 33862AD

JOB NO.	33862
SCALE	1:24
DATE	
DRAWN BY	JAF 16JUL19
CHECKED BY	RWI 24JUL19
SHEET SIZE	D
SHEET NO.	1 OF 1

View File Created 06-NOV-2019 13:30:58