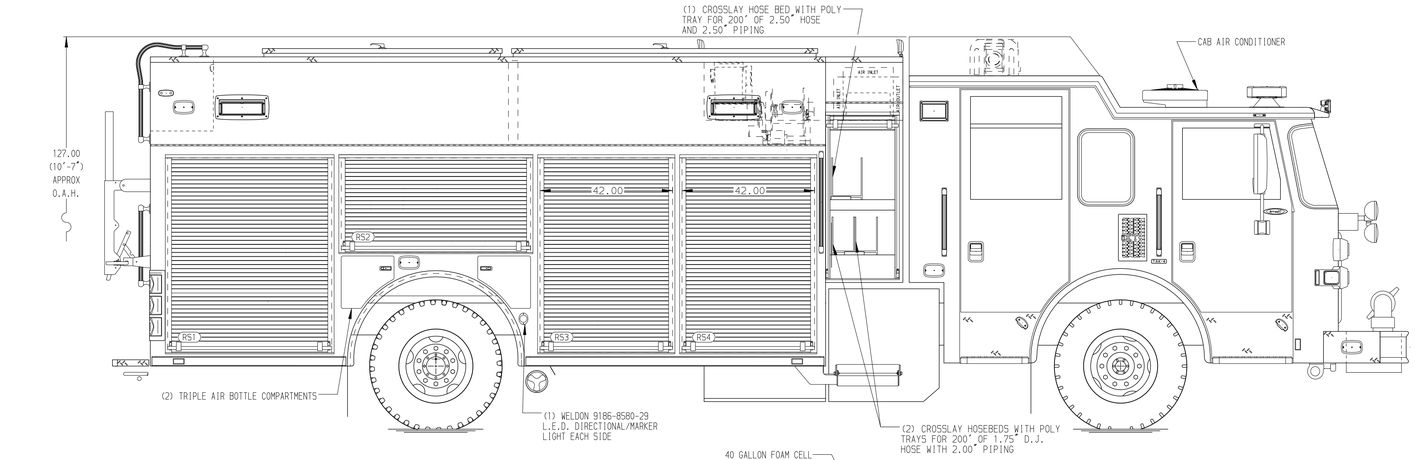

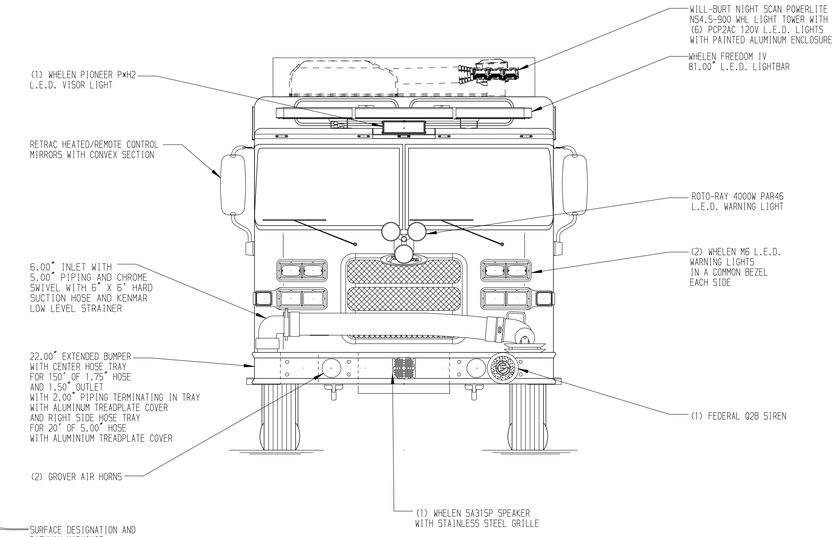

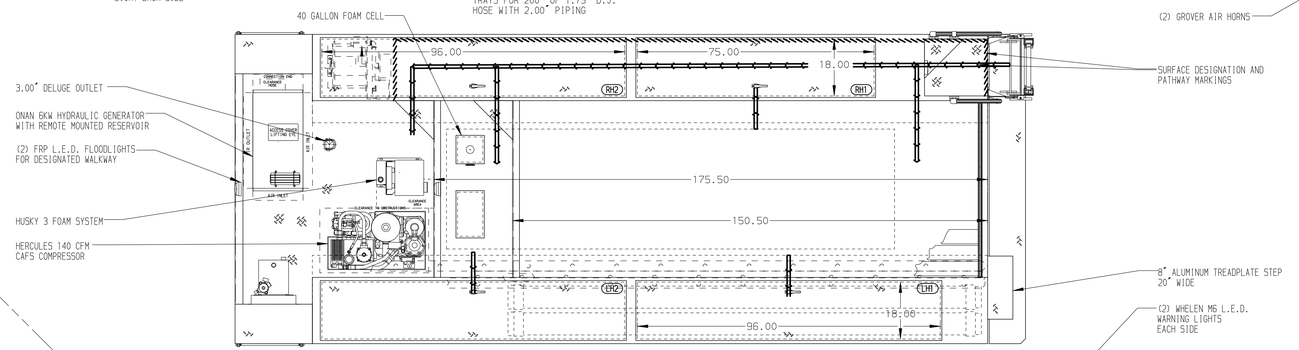

HOSEBED CAPACITIES

1. 250' OF 3.00" HOSE
2. 1500' OF 4.00" HOSE
3. 250' OF 3.00" HOSE

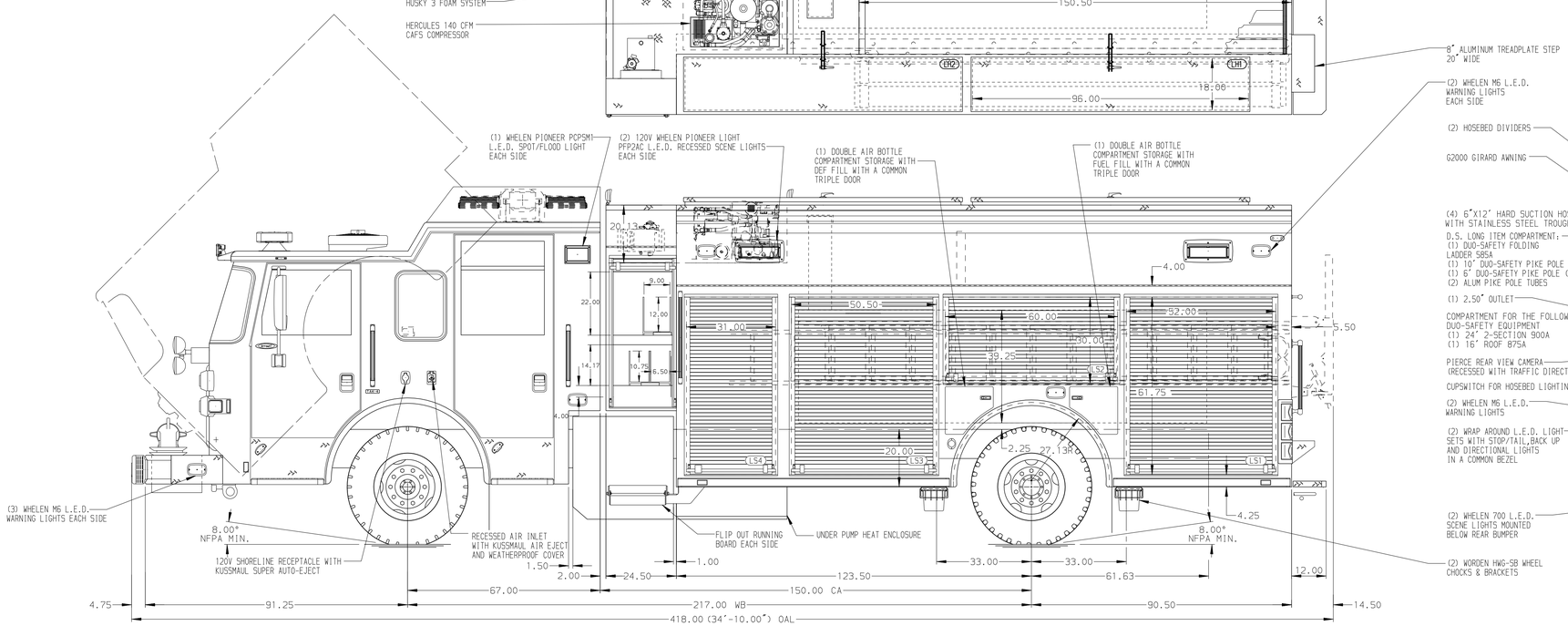

ALUMINUM BODY

MAXIMUM O.A.H. 127.00"

SIDE ROLL AND FRONTAL IMPACT PROTECTION

NOTE

DIMENSIONS SHOWN ARE APPROXIMATE AND ARE SUBJECT TO MINOR DEVIATIONS AS MAY OCCUR OR BE NECESSARY IN CONSTRUCTION.
MINOR DETAILS NOT SHOWN.

1. TIRE CHAINS TO BE SHIPPED LOOSE
2. (1) AIR OUTLET WITH SHUT OFF VALVE ON D.S. PUMP PANEL
3. BATTERY CHARGER LOCATED IN THE CAB BEHIND THE DRIVER'S SEAT
4. BATTERY CHARGER INDICATOR BEHIND DRIVER'S SEAT DISPLAYED THROUGH WINDOW
5. DUAL L.E.D. LIGHT STRIPS LOCATED IN HOSE BED
6. PULL STRAP ON DOOR IN LS1, LS2, LS3, LS4, RS1, RS2, RS3, R4, AND EACH ROLL UP CROSSLAY DOOR
7. ONE ADJUSTABLE FULL WIDTH/DEPTH SHELF IN LS1 AND RS1
8. ADJUSTABLE SLIDE-OUT TRAYS TWO IN RS3 AND RS4 AND ONE IN RS1
9. TWO ADJUSTABLE TILTING SLIDE-OUT TRAYS IN RS3 AND RS4
10. CABLE RELEASE LATCH WITH SINGLE HAND OPERATION FOR ALL SLIDE OUT TRAYS
11. ONE SWING-OUT ALUMINUM TOOL BOARD IN LS3 AND RS2
12. ONE ADJUSTABLE FULL WIDTH/DEPTH 2.00" HIGH SIDES SHELF IN B1
13. SLIDE-OUT FLOOR MOUNTED 120LBS OIL DRY HOPPER IN RS1
14. ONE VERTICAL PARTITION (SPECIAL HEIGHT) IN RS1
15. ALUMINUM PEGBOARD WITH TRACKS ON THE BACK WALL OF LS3 AND RS2
16. STORAGE RACK FOR 4 AIR BOTTLES IN LS1
17. (3) ADDITIONAL POLY TRAYS SHIPPED LOOSE
18. CIRCUIT BREAKER PANEL IN LS3
19. ONE HANNAY ELECTRIC REWIND CORD REEL MODEL 1618-17-18 WITH 200' OF 10/3 CABLE IN RH2
20. ONE 120V 4-PLACE DUPLEX RECEPTACLE BEHIND THE DRIVER'S SEAT ON THE ENGINE TUNNEL, IN CENTER EMS COMPARTMENT, RS1, AND RS4
21. FOUR DRAWER CTECH DRAWER ASSEMBLY IN LS3
22. FOUR 120V TWISTLOCK WEATHERPROOF RECEPTACLES IN LS3

REV	DATE	BY	CH
7	27AUG19	LST	DTS
6	26AUG19	LST	DTS
5	16JUL19	LST	DTS
4	13JUN19	KLE	KWI

CHASSIS DATA — MAKE: PIERCE — MODEL: ARROW XT

Pierce MANUFACTURING INC.

TITLE: 1500-D-790P, 750 GAL OF WATER W/ 40 GAL FOAM CELL 214" PUC RESCUE, LADDERS THRU BODY, (3) X-LAYS

FOR: INDIAN LAKE VOLUNTEER FIRE DEPARTMENT, INDIAN LAKE, NEW YORK

DWG NO.: 33915AD

JOB NO.	SCALE	DRAWN BY	DATE	CHECKED BY	SHEET SIZE	SHEET NO.
33915	1:24	LST	08MAY19	AZA	D	1 OF 1

View File Created 27-AUG-2019 07:47:55