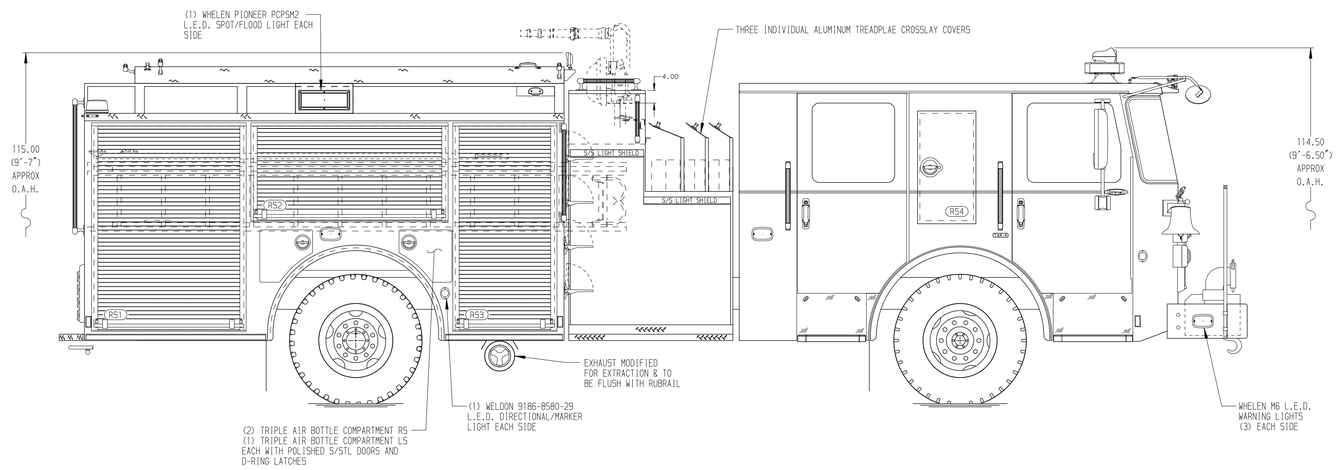

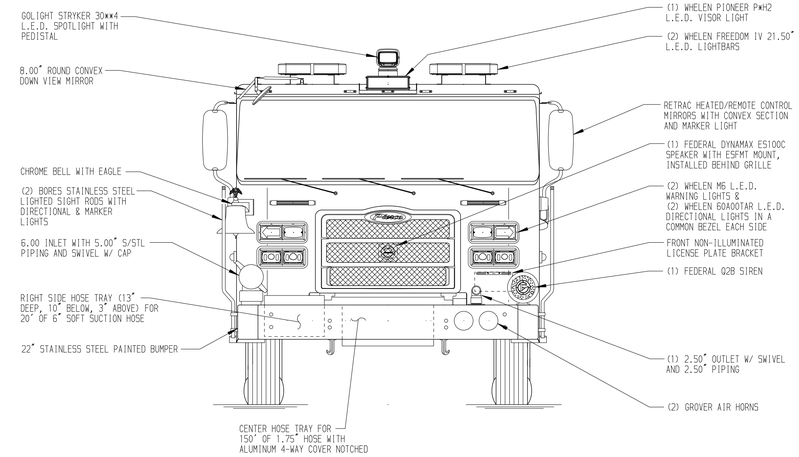

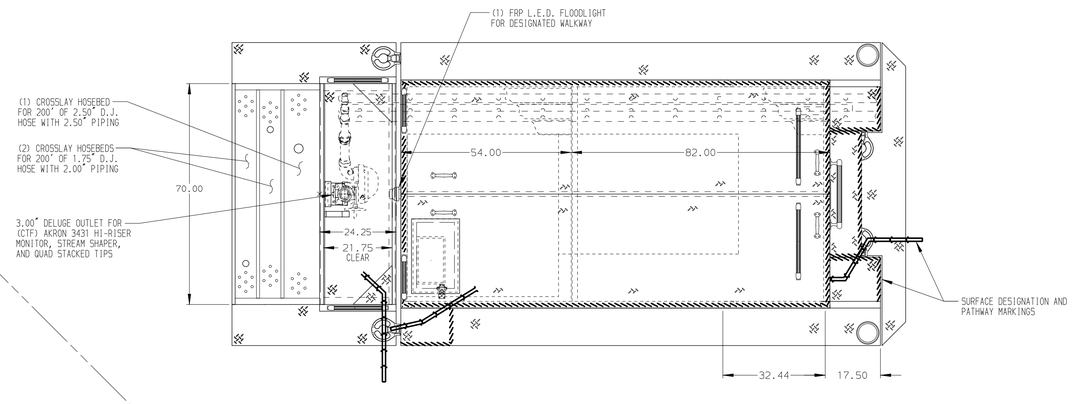

HOSEBED CAPACITIES

1. - 500' OF 2.50" D.J. HOSE
2. - 850' OF 2.50" D.J. HOSE
3. -1000' OF 4.00" D.J. HOSE
4. EMPTY HOSE BED

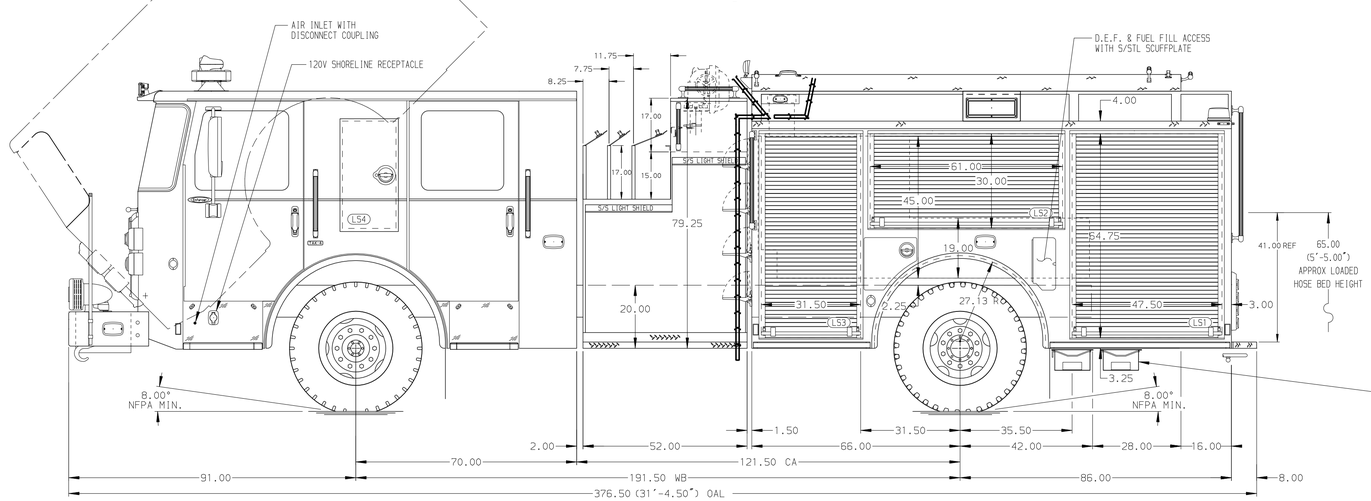

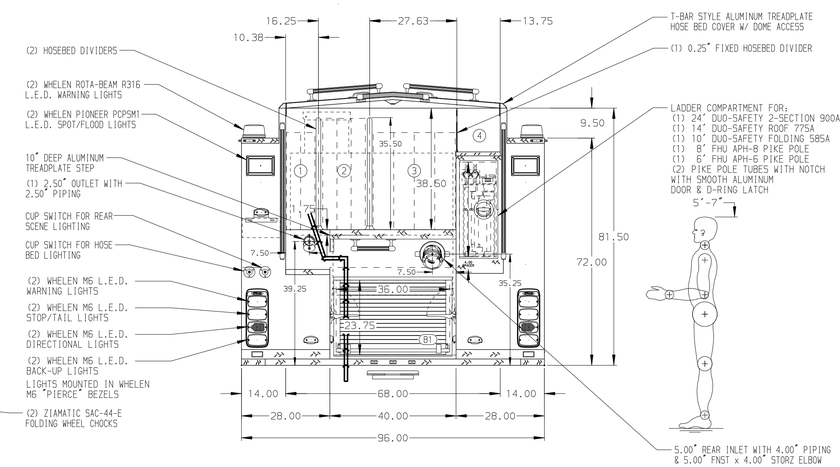

STAINLESS STEEL BODY

MAXIMUM O.A.H. 115.00"

FRONTAL IMPACT PROTECTION

NOTE

DIMENSIONS SHOWN ARE APPROXIMATE AND ARE SUBJECT TO MINOR DEVIATIONS AS MAY OCCUR OR BE NECESSARY IN CONSTRUCTION.
MINOR DETAILS NOT SHOWN.

1. AIR OUTLET WITH SHUT OFF VALVE LOCATED ON LS PUMP PANEL
2. BATTERY CHARGER/COMPRESSOR LOCATED ON THE REAR WALL OF THE EMS COMPARTMENT BEHIND THE DRIVER'S SEAT
3. BATTERY CHARGE INDICATOR LOCATED ON DRIVER'S SEAT RISER
4. S/STL SCUFFPLATE AROUND FUEL FILL OPENING AND AIR BOTTLE COMPARTMENTS
5. DRIP PAN GUARDS FOR ALL BODY COMPARTMENT ROLL-UP DOORS
6. PULL STRAPS FOR DOORS IN EACH BODY COMPARTMENT
7. ONE ADJUSTABLE SLIDE-OUT TRAY IN COMPARTMENT RS3
8. FOUR ADJUSTABLE VERTICAL PARTITIONS FOR HOSE STORAGE IN B1
9. THREE ADJ FULL WIDTH/DEPTH SELVES IN COMPARTMENTS RS1 ; ONE IN LS3, AND RS3
10. ONSPOT AUTOMATIC TIRE CHAINS TO BE PROVIDED AT REAR
11. PAC TRAC INSTALLED ON THE REAR WALL OF LS1, LS2, LS3, AND RS2
12. THREE HORIZONTAL EQUIPMENT MOUNTING TRACKS IN B1
13. TWO ZICO MODEL UH-5-30-3-SFPHS AIR BOTTLE HOLDERS WITH TRACKS MOUNTED IN LS2 AND RS2

REV	DATE	BY	CH
3	30SEP19	LST	CWI
2	04SEP19	LST	CWI

CHASSIS DATA	TITLE	1250-D-500G WATER, 152" FH/FDLER BODY, SIDE CTRL (3) CROSSLAYS, DELUGE, LADDERS BESIDE TANK	
MAKE: PIERCE	FOR	CAMBRIDGE FIRE DEPARTMENT CAMBRIDGE, MASSACHUSETTS	
MODEL: ENFORCER	DWG NO.	34136AD	

Pierce MANUFACTURING INC.

JOB NO.	34136
SCALE 1:24	DATE
DRAWN BY LST	08JUL19
CHECKED BY NPA	09JUL19
SHEET SIZE D	SHEET NO. 1 OF 1

View File Created 30-SEP-2019 13:25:47