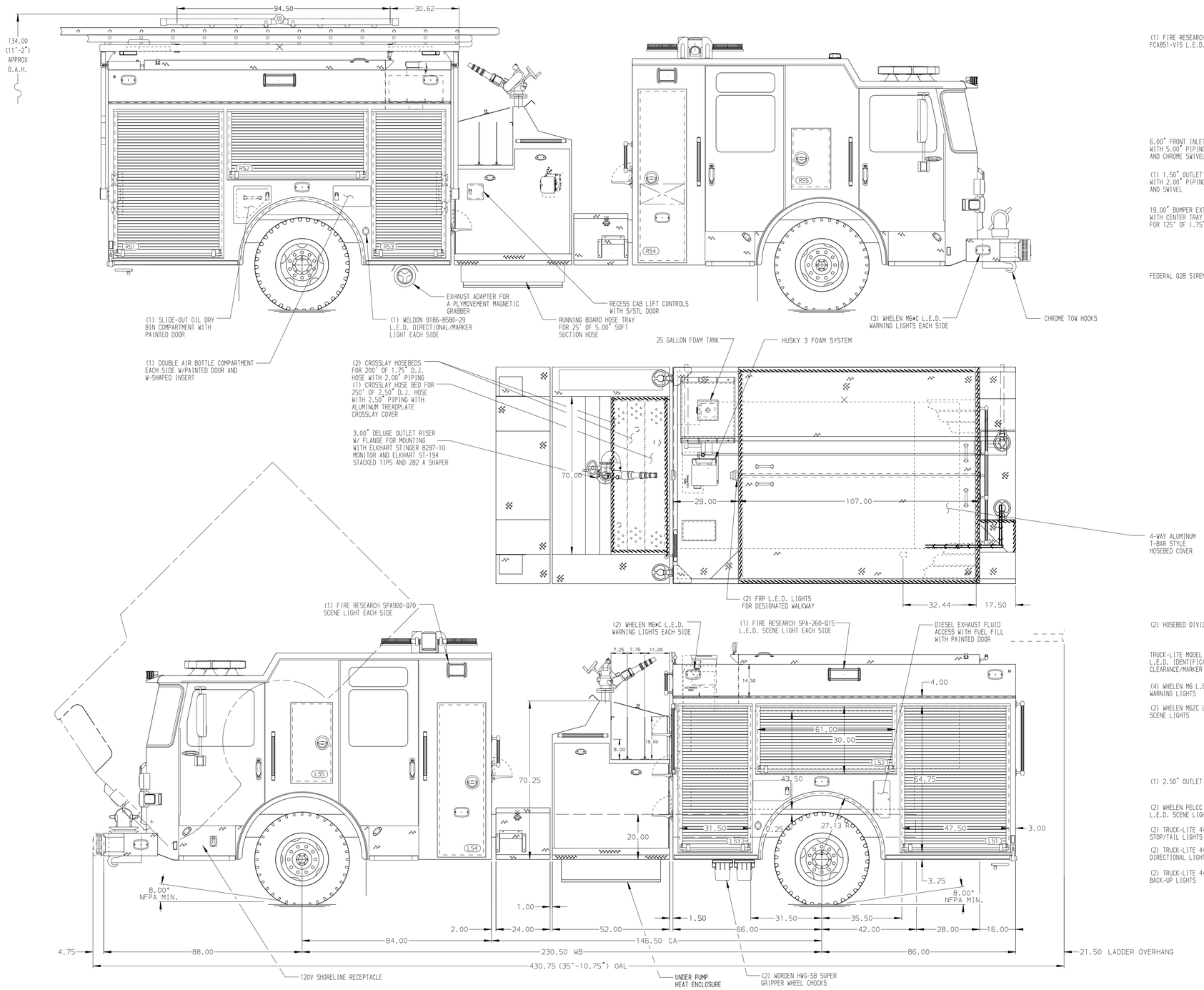

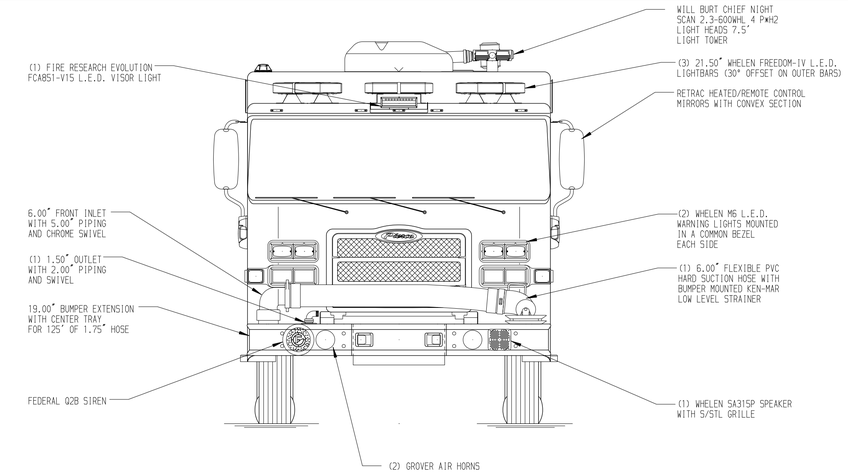

HOSEBED CAPACITIES

1. 150' OF 1.75" D.J. HOSE (TOP)
   350' OF 3.00" D.J. HOSE (BOTTOM)
2. 1000' OF 5.00" D.J. HOSE
3. 400' OF 3.00" D.J. HOSE

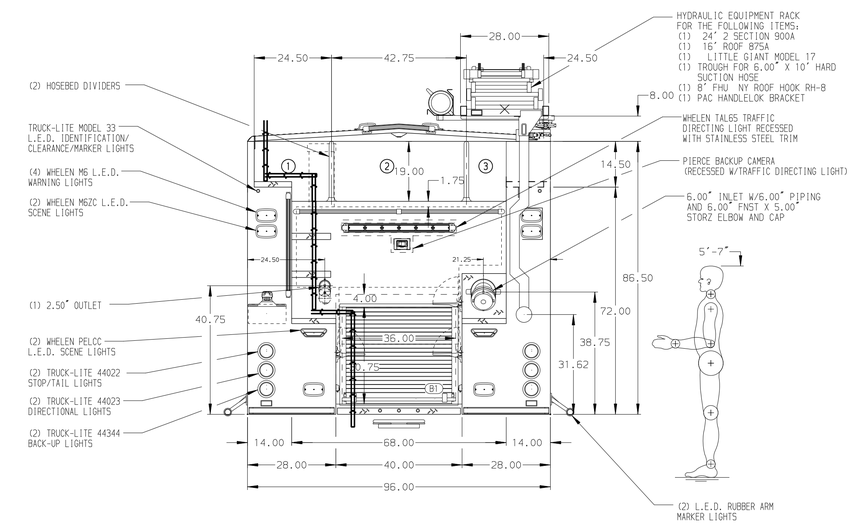

ALUMINUM BODY

NOTE

DIMENSIONS SHOWN ARE APPROXIMATE AND ARE SUBJECT TO MINOR DEVIATIONS AS MAY OCCUR OR BE NECESSARY IN CONSTRUCTION.
MINOR DETAILS NOT SHOWN.

1. INSTA-CHAIN AUTOMATIC TIRE CHAINS TO BE PROVIDED AT REAR
2. VOGEL LUBE SYSTEM PUMP LOCATED PER SHOP ORDER
3. BATTERY CHARGER LOCATED IN COMPARTMENT LS4
4. BATTERY CHARGE INDICATOR LOCATED ON D.S. SEAT RISER
5. HOT WATER HEATER IN PUMP COMPARTMENT
6. DRIP PAN GUARD FOR ALL BODY ROLL-UP DOORS
7. ZICO SCBA BRACKET MOUNTED IN COMPARTMENT LS4
8. ONE FULL WIDTH/DEPTH PAINTED ADJUSTABLE SHELF IN COMPARTMENT LS1, RS2 & B1; TWO IN LS3, RS1 & RS3
9. ONE FLOOR MOUNTED SLIDE-OUT TRAY IN COMPARTMENT RS1
10. SWING-OUT TOOL GRID SYSTEM IN COMPARTMENT LS2
11. PARTITION BETWEEN COMPARTMENTS LS1/B1 AND RS1/B1
12. ONE VERTICAL PARTITION (SPECIAL HEIGHT) IN COMPARTMENT RS3
13. TWO FIRE HOOKS UNLIMITED HOOKS NEST 4 BRACKET LOCATED ON REAR WALL OF CAB TO MOUNT FHU RH-6
14. ONE 120V DUPLEX RECEPTACLE TO BE LOCATED IN COMPARTMENT RS3 & RS4; THREE IN THE CAB
15. AIR COMPRESSOR LOCATED IN COMPARTMENT LS4

REV	DATE	BY	CH
1	14OCT19	LST	JJR
2	13SEP19	LST	JJR
3	19JUL19	LME	WKL

CHASSIS DATA	
MAKE	PIERCE
MODEL	ENFORCER
DWG NO.	34145AD

Pierce MANUFACTURING INC.

TITLE	2000-D-1000P, 25 GAL FOAM TANK,152" BODY, FH FDLER (3) XLAYS, DELUGE, HYD LADDER RACK, HUSKY 3
FOR	MENOMONEE FALLS FIRE DEPARTMENT MENOMONEE FALLS, WISCONSIN

JOB NO.	34145
SCALE	1:24
DATE	
DRAWN BY	LME 15JUL19
CHECKED BY	WKL 15JUL19
SHEET SIZE	D
SHEET NO.	1 OF 1

View File Created 14-OCT-2019 09:58:56