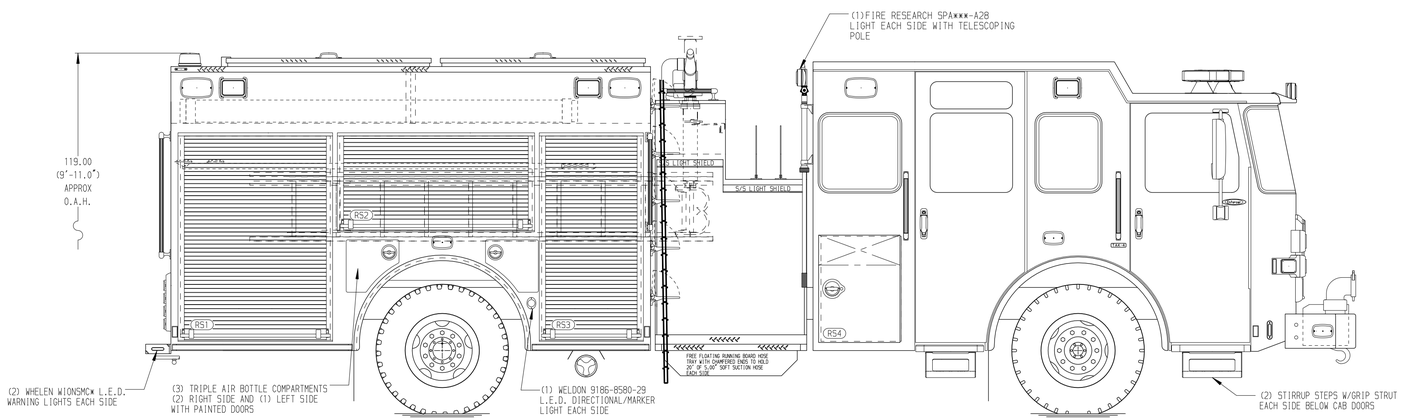

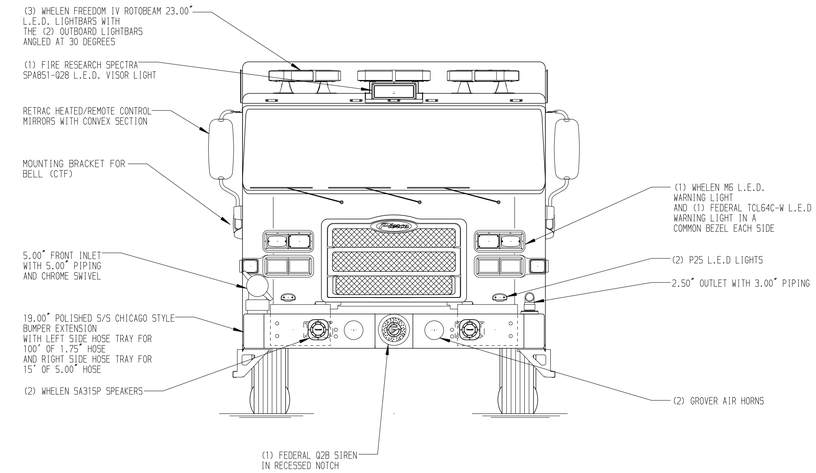

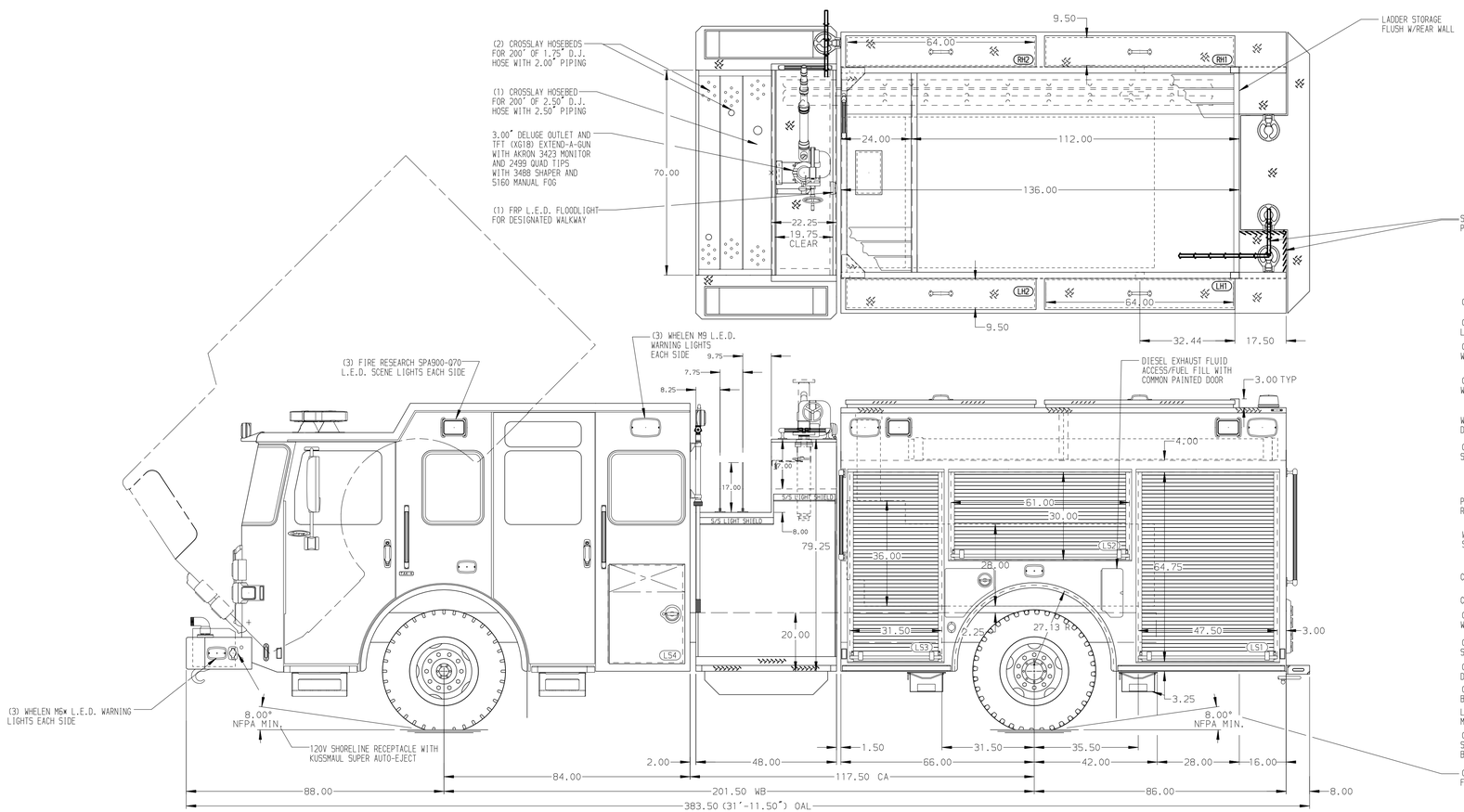

HOSEBED CAPACITIES

1. 400' OF 3.00" HOSE
2. 1500' OF 5.00" HOSE
3. 200' OF 2.50" HOSE
4. 300' OF 1.75" HOSE

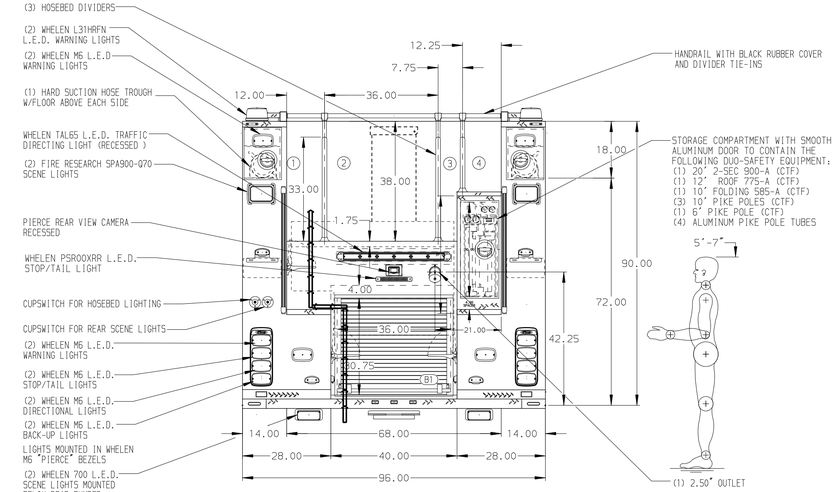

ALUMINUM BODY

FRONTAL IMPACT PROTECTION

NOTE

DIMENSIONS SHOWN ARE APPROXIMATE AND ARE SUBJECT TO MINOR DEVIATIONS AS MAY OCCUR OR BE NECESSARY IN CONSTRUCTION.
MINOR DETAILS NOT SHOWN.

1. ONSPOT AUTOMATIC TIRE CHAINS TO BE PROVIDED AT THE REAR
2. AIR INLET/OUTLET WITH DISCONNECT FITTING ON D.S. STEP WELL
3. KUSSMAUL BATTERY CHARGER LOCATED BEHIND DRIVER'S SEAT
4. BATTERY CHARGER INDICATOR LOCATED ON DRIVER'S SEAT RISER
5. DUAL L.E.D. LIGHT STRIPS LOCATED IN HOSE BED
6. DRIP PAN GUARD FOR ROLL-UP DOOR IN LS1, LS2, LS3, B1, RS1, RS2, AND RS3
7. ONE FULL WIDTH/DEPTH ADJUSTABLE SHELF IN COMPARTMENTS LS1, RS1, RS2, RS3, AND B1; TWO IN LS3
8. ONE FLOOR MOUNTED SLIDE-OUT TRAY IN COMPARTMENTS LS1, LS3, RS1, RS3, AND B1
9. ALUMINUM PEGBOARD ON THE BACK WALL OF COMPARTMENTS LS1, LS3, RS1, AND RS3
10. EXTINGUISHER RACK LOCATED ON THE FLOOR ON COMPARTMENT B1
11. FULL HEIGHT PEGBOARD ON THE BACK WALL OF COMPARTMENTS LS2 AND RS2

REV	DATE	BY	CH
3	03JAN20	KLE	DTS
2	15NOV19	KLE	MSA
1	16OCT19	LST	WKL

CHASSIS DATA
MAKE: PIERCE
MODEL: ENFORCER

Pierce MANUFACTURING INC.

TITLE: 2000-D-500 GAL POLY, 152" FH FDLER BODY
LADDERS BETWEEN TANK & SIDE SHEET, (3) CROSSLAYS

FOR: OSSINING FIRE DEPARTMENT
OSSINING, NEW YORK

DWG NO.: 34377AD

JOB NO.	34377
SCALE	1:24
DATE	
DRAWN BY	LME 110CT19
CHECKED BY	WKL 110CT19
SHEET SIZE	D
SHEET NO.	1 OF 1

View File Created 03-JAN-2020 13:15:07