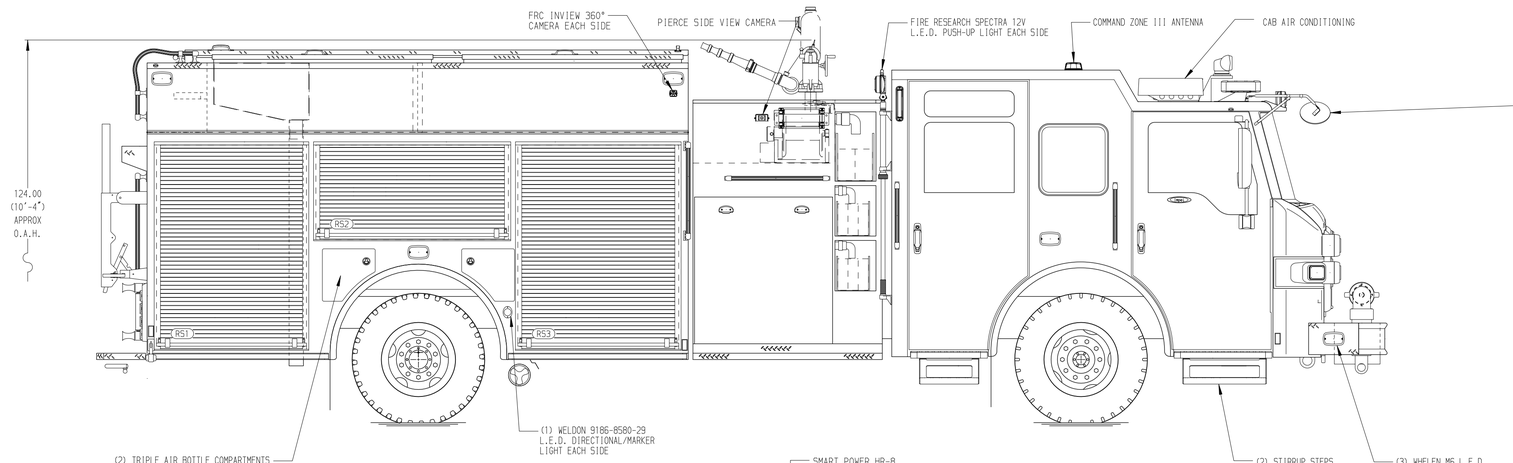

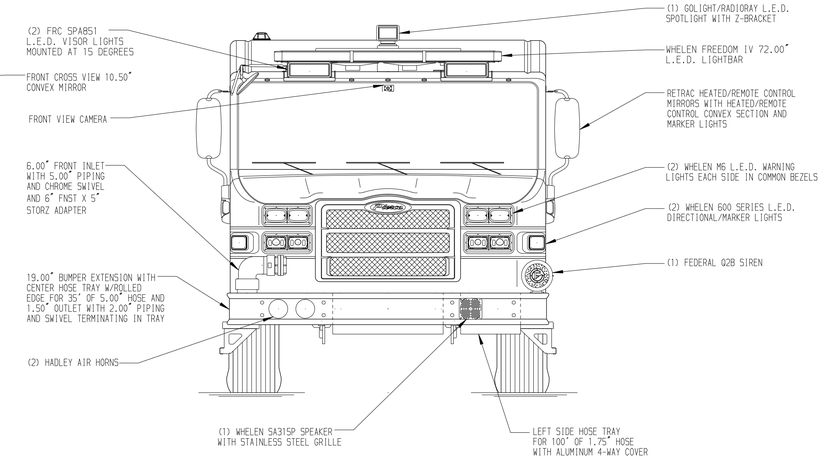

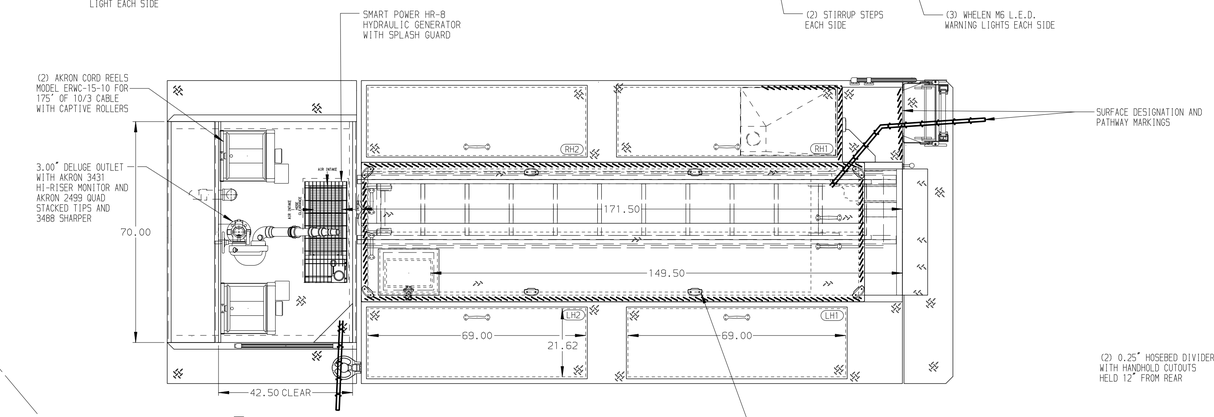

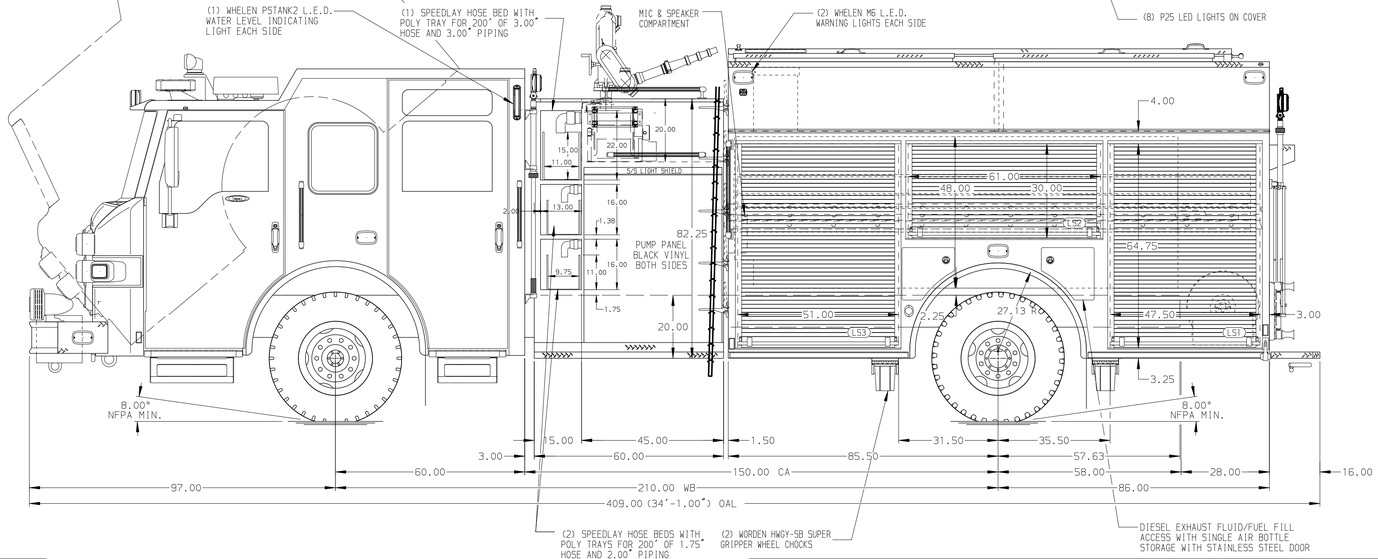

HOSEBED CAPACITIES

1 - 400' OF 3.00" D.J. HOSE
2 - 300' OF 1.75" D.J. HOSE
3 - 800' OF 5.00" RUBBER L.D. HOSE

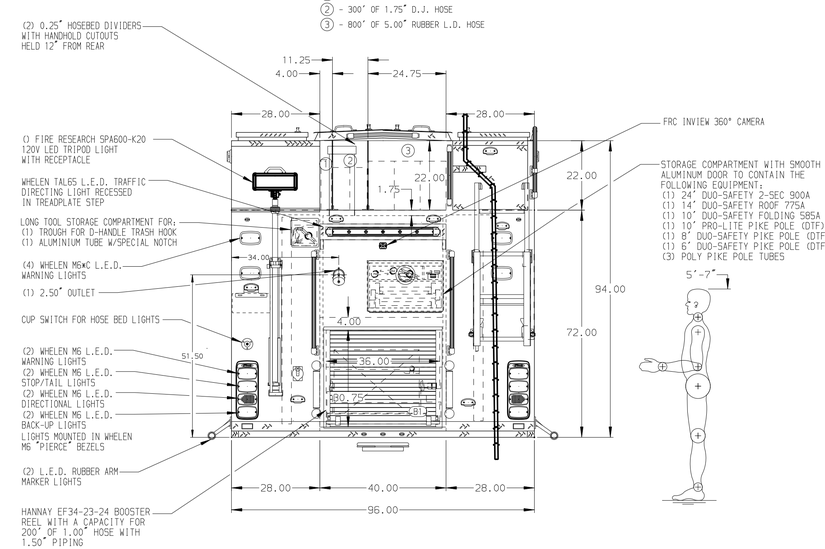

ALUMINUM BODY

SIDE ROLL AND FRONTAL IMPACT PROTECTION

NOTE

DIMENSIONS SHOWN ARE APPROXIMATE AND ARE SUBJECT TO MINOR DEVIATIONS AS MAY OCCUR OR BE NECESSARY IN CONSTRUCTION.
MINOR DETAILS NOT SHOWN.

1. AIR INLET WITH DISCONNECT COUPLING LOCATED IN THE DS STEP WELL
2. BATTERY CHARGER LOCATED BEHIND DRIVER SEAT
3. BATTERY CHARGER INDICATOR LOCATED AT DRIVER'S SIDE STEP AREA
4. 120V BLUE SEA SURE EJECT 7851 SHORELINE RECEPTACLE LOCATED IN THE DS STEP WELL
5. DUAL L.E.D. LIGHT STRIPS LOCATED IN HOSE BED
6. DRIP PAN GUARD FOR ROLL-UP DOOR LOCATED IN EACH COMPARTMENT
7. TWO FULL WIDTH/DEPTH ADJUSTABLE SHELVES IN COMPARTMENTS LS1 AND RS1
8. ONE ADJUSTABLE TILTING SLIDE-OUT TRAY IN COMPARTMENT RS2
9. ONE FLOOR MOUNTED ALUMINUM FLAT TOP TRAY IN COMPARTMENT RS3
10. ONE ADJUSTABLE TOOL BOARD MOUNTED TO SLIDE-OUT TRAY IN COMPARTMENT RS3
11. SWING-OUT TOOL BOARD WITH PEGBOARD PATTERN IN COMPARTMENT LS2
12. ONE SLIDE-OUT ALUMINUM TOOL BOARD IN COMPARTMENTS LS3 AND RS1
13. ONE VERTICAL PARTITION IN COMPARTMENT RS1
14. RACK FOR (6) AIR BAGS IN COMPARTMENT RS3
15. CIRCUIT BREAKER PANEL IN COMPARTMENT LS3
16. OIL DRY HOPPER IN HATCH ABOVE RS1
17. ONE 20A,120V 6-PLACE RECEPTACLE STRIP IN COMPARTMENT RS3
18. TWO 15/20A, 120V 4-PLACE DUPLEX RECEPTACLES IN CAB
19. ONE 15/20A, 120V DUPLEX RECEPTACLE IN CAB

REV	DATE	BY	CH
7	08JAN20	KLE	CWI
6	05DEC19	KLE	CWI

CHASSIS DATA
MAKE: PIERCE
MODEL: IMPEL FR

Pierce MANUFACTURING INC.

TITLE: 2000-D-750, 171" RESCUE BODY, HATCH COMPARTMENTS SPEEDLAYS, LADDERS THRU TANK, DELUGE, GENERATOR
FOR: AVON CITY FIRE DEPARTMENT, AVON, OHIO
DWG NO.: 34439AD

JOB NO. 34439
SCALE 1:24
DATE
DRAWN BY KLE 280CT19
CHECKED BY NPA 290CT19
SHEET SIZE D
SHEET NO. 1 OF 1

View File Created 13-JAN-2020 14:11:44