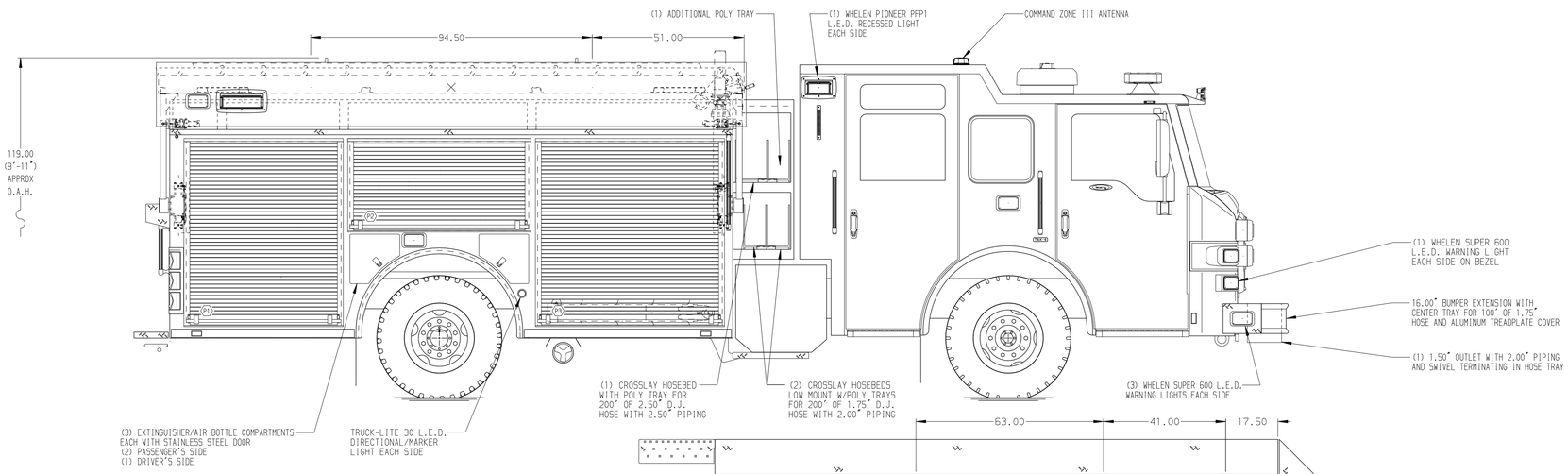

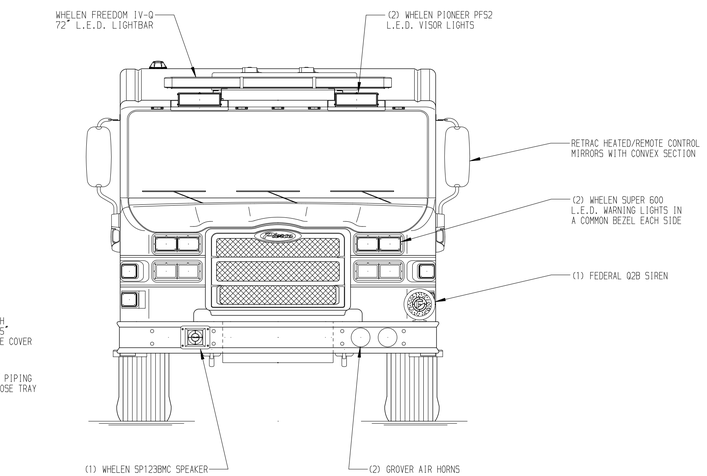

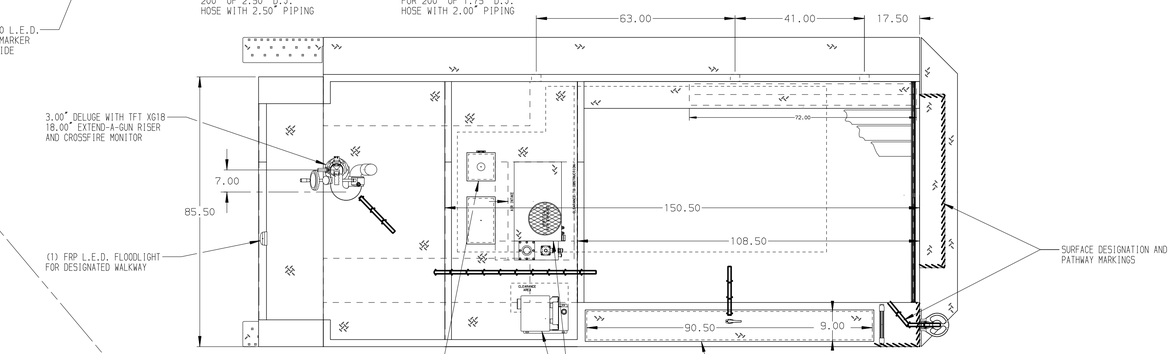

HOSEBED CAPACITIES

1. 800' OF 5.00" D.J. POLY HOSE
2. 600' OF 3.00" D.J. POLY HOSE

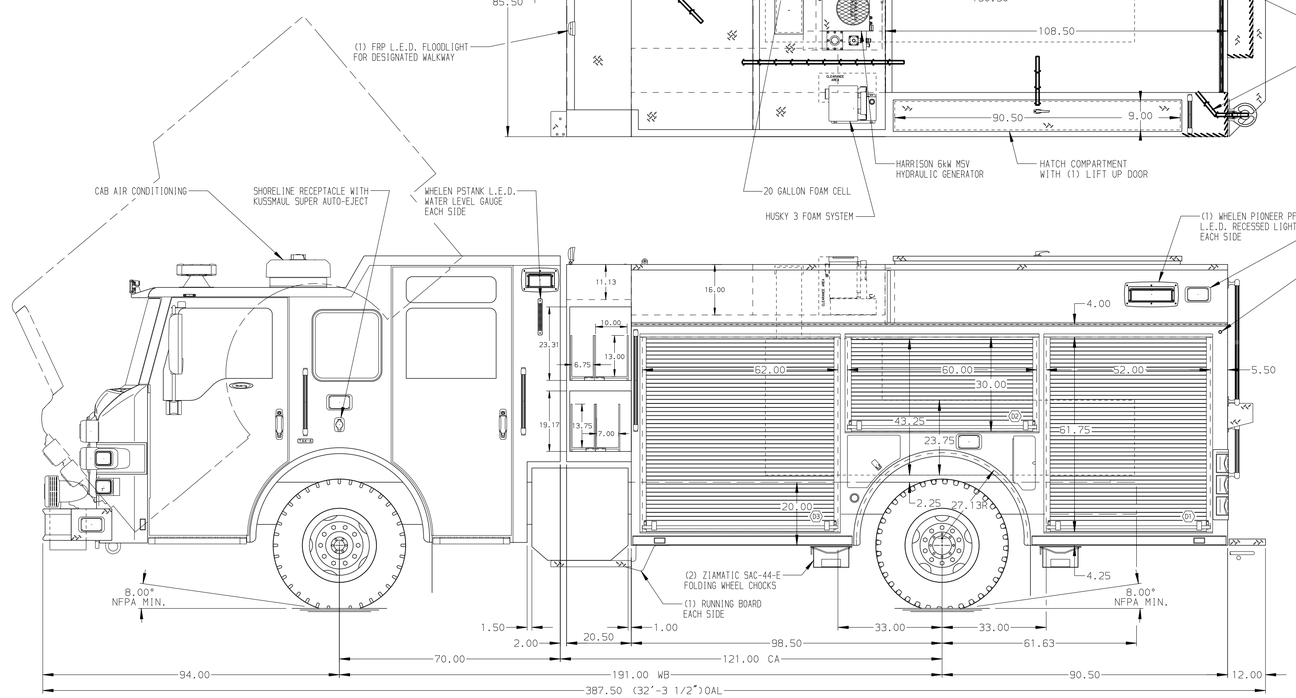

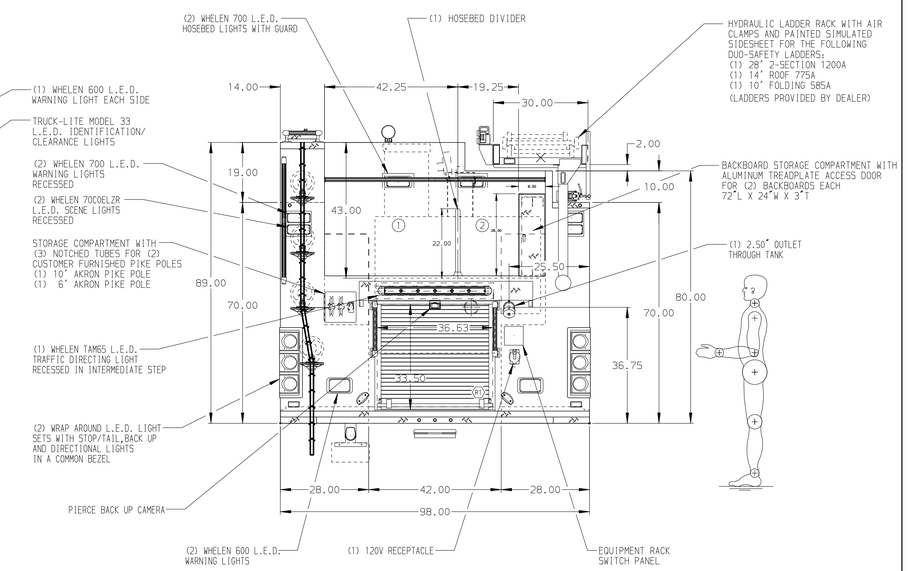

ALUMINUM BODY

SIDE ROLL AND FRONTAL IMPACT PROTECTION

NOTE

DIMENSIONS SHOWN ARE APPROXIMATE AND ARE SUBJECT TO MINOR DEVIATIONS AS MAY OCCUR OR BE NECESSARY IN CONSTRUCTION.
MINOR DETAILS NOT SHOWN.

1. VOGEL LUBE SYSTEM PUMP LOCATED PER SHOP ORDER
2. BATTERY CHARGER LOCATED BEHIND DRIVER'S SEAT
3. BATTERY CHARGE INDICATOR LOCATED NEAR DRIVER'S SEAT RISER WITH BRACKET
4. SIX ADJUSTABLE FULL WIDTH/FULL DEPTH SHELVES - ONE IN COMPARTMENT D1, ONE IN D2, TWO IN D3, ONE IN P1 AND ONE IN P3
5. STORAGE FOR LITTLE GIANT REVOLUTION XE 17' LADDER IN COMPARTMENT P3
6. ONE FLOOR MOUNTED SLIDE-OUT TRAY IN COMPARTMENTS D1, P1 AND P3
7. ONE SWING-OUT ALUMINUM TOOL BOARD IN COMPARTMENT P2
8. ONE VERTICAL BOLT-IN PARTITION BETWEEN COMPARTMENTS D1-R1 AND P1-R1
9. AIR INLET WITH DISCONNECT COUPLING AT DRIVER'S STEP WELL
10. CIRCUIT BREAKER PANEL IN COMPARTMENT D3

REV	DATE	BY	CH
3	16DEC16	JRO	PJP
2	15NOV16	JRO	PJP

CHASSIS DATA
MAKE: PIERCE
MODEL: VELOCITY

Pierce MANUFACTURING INC.

TITLE: 1500-D-500 WATER/20 FOAM, 189" PUMPER BODY CROSSLAYS, DELUGE, GENERATOR, HYDRAULIC LADDER RACK
FOR: ADAMS COUNTY FIRE RESCUE DENVER, COLORADO
DWG NO.: 30312AD

JOB NO.	30312
SCALE	1:24
DATE	
DRAWN BY	JRO 23AUG16
CHECKED BY	CDU 24AUG16
SHEET SIZE	D
SHEET NO.	1 OF 1

View File Created 19-DEC-2016 07:50:45