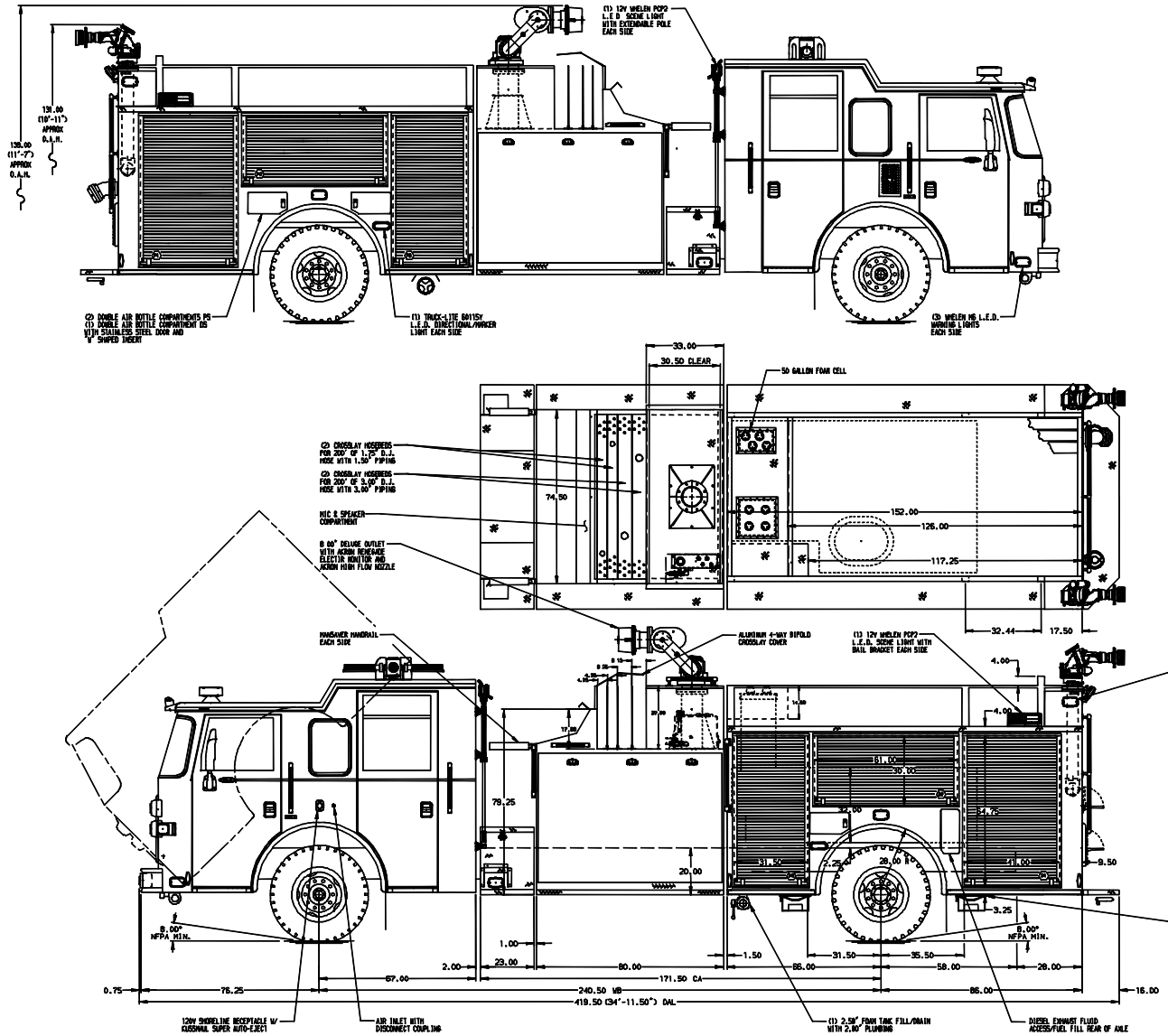

ALUMINUM BODY

SIDE ROLL & FRONTAL IMPACT PROTECTION

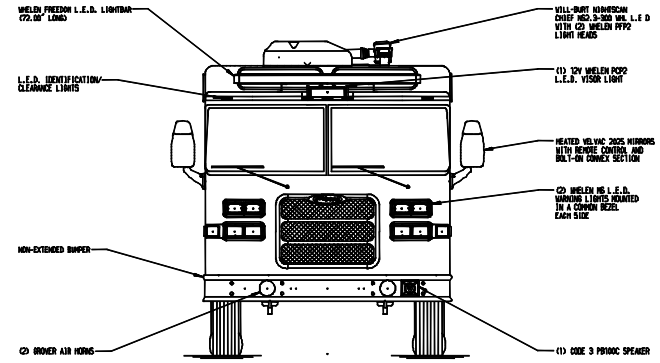

HOSEBED CAPACITIES
1. 1200' OF 5.00" D.J. POLY HOSE
2. 1200' OF 5.00" D.J. POLY HOSE
3. 300' OF 3.00" D.J. POLY HOSE

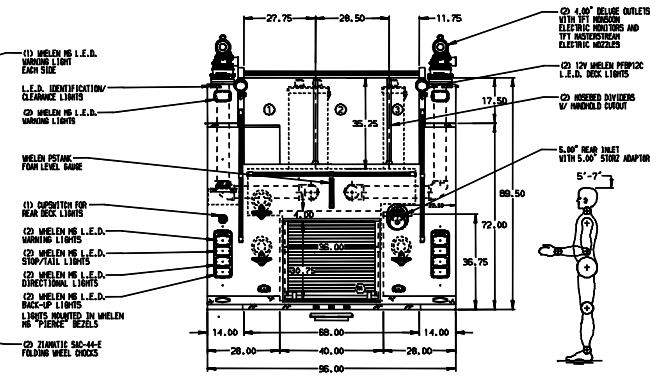

NOTE

DIMENSIONS SHOWN ARE APPROXIMATE AND ARE SUBJECT TO MINOR DEVIATIONS AS MAY OCCUR OR BE NECESSARY IN CONSTRUCTION.
MINOR DETAILS NOT SHOWN.

1. ALUMINUM TREADPLATE EXTERIOR REAR WALL OF CAB
2. BATTERY CHARGER LOCATED IN COMPARTMENT D3
3. BATTERY CHARGE INDICATOR LOCATED NEAR D.S. SEAT RISER WITH BRACKET
4. PERIMETER SCENE LIGHTS LOCATED PER SHIP ORDER
5. 5/8TL FENDER CROWNS FRONT AND REAR
6. PIERCE L.E.D. DUAL COMPARTMENT LIGHT STRIPS LOCATED PER SHIP ORDER
7. SHELF TRACKS LOCATED IN COMPARTMENTS R1, R2, D3, P1, P2, & P3
8. ONE FULL WIDTH/DEPTH PAINTED ADJUSTABLE SHELF IN COMPARTMENTS D1 & P1; TWO IN D3 & P3
9. STORAGE RACK FOR (10) AIR BOTTLES LOCATED IN COMPARTMENTS D1 & P1
10. PIERCE LOGO MUDFLAPS FRONT AND REAR
11. ALL FOLDING STEPS TO BE TRIDENT WITH INTEGRATED L.E.D. LIGHT UNLESS SPECIFIED
12. HUSKY 300 DUAL AGENT FOAM SYSTEM
13. MOUNTING BASES FOR ANTENNAS LOCATED PER SHIP ORDER
14. TWO ADJUSTABLE HEIGHT SLIDE-OUT TRAYS LOCATED IN COMPARTMENT D3

REV	DATE	BY	CH
07JUL14	COL	PJP	
07MAY14	COL	PJP	
20MAR14	THI	BZI	

CHASSIS DATA	MAKE	PIERCE
	MODEL	AX5710

Pierce MANUFACTURING INC.

TITLE	3000-D-500 FOAM TANK W/50 GAL. FOAM CELL, 152"PUMPER FLUSH REAR, (4) CROSSLAYS, HUSKY 300	JOB NO.	27818
		SCALE 1:24	DATE
FOR	BP CHERRY POINT REFINERY BLAINE, WASHINGTON	DRAWN BY COL	05MAR14
		CHECKED BY THI	10MAR14
DWG NO.	27818AD	SHEET SIZE D	SHEET NO. 1 OF 1

View File Created 09-JUL-2014 14:38:18