PUMPER

BODY
Long Aluminum 2nd Gen Pumper

CHASSIS
Saber FR Chassis

CHASSIS

AXLE, FRONT, CUSTOM
18,000 Lb Dana Axle

AXLE, REAR
27,000 Lb Dana Axle

ENGINE
380 HP Cummins ISL9 Engine

TRANSMISSION
Allison 5th Gen, 3000 EVS P

BUMPER
19" Extended Stainless Steel

CAB
7010 Saber FR Cab

BODY

WATER TANK
1000 Gallon Poly Water Tank

COMPT, PUMPER, REAR
51.25" FF RollUp Rear Compt

COMPT, PUMPER, DRIVER SIDE
161" RollUp Full Height & Depth Front & Rear

COMPT, PUMPER PASS. SIDE
161" RollUp Full Height & Depth Front & Rear

FIRE SUPPRESSION

PUMPHOUSE
45" Control Zone Side Mount

PUMP
1500 GPM Waterous CSU

CROSSLAYS, 1.50"
1.50" Crosslays Not Required

CROSSLAYS, 2.50"
2.50" Crosslays Not Required

SPEEDLAYS
(2) 1.50" Standard Capacity
(1) 2.50" Standard Capacity

GENERATOR
Harrison C-Gen 6.0kW Hydraulic Generator

Foam System
Foam System Not Required

Foam Cell
Foam Cell Not Required

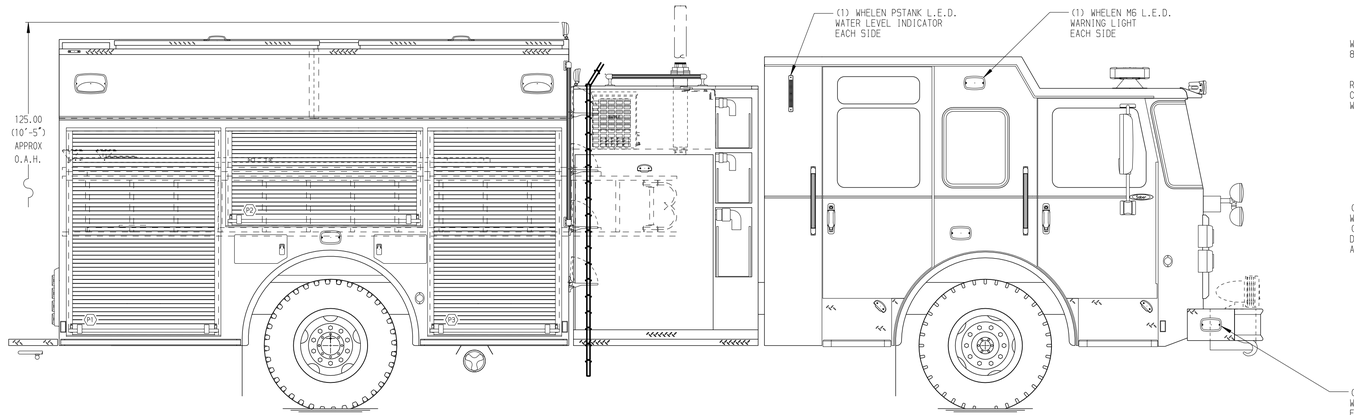

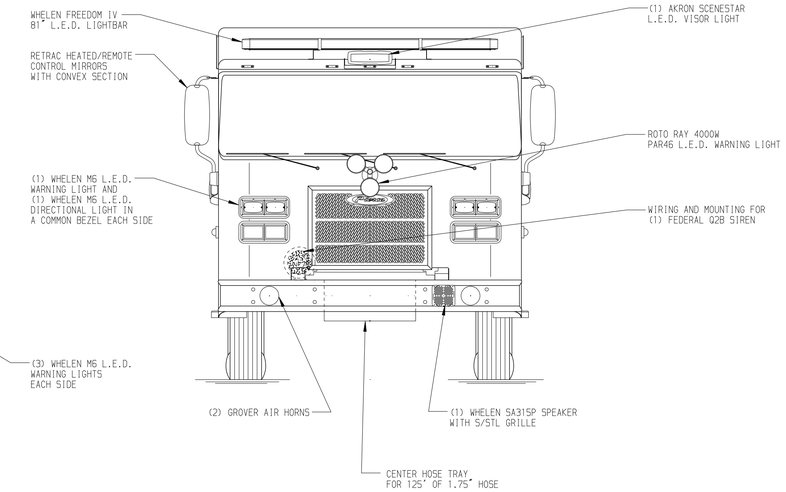

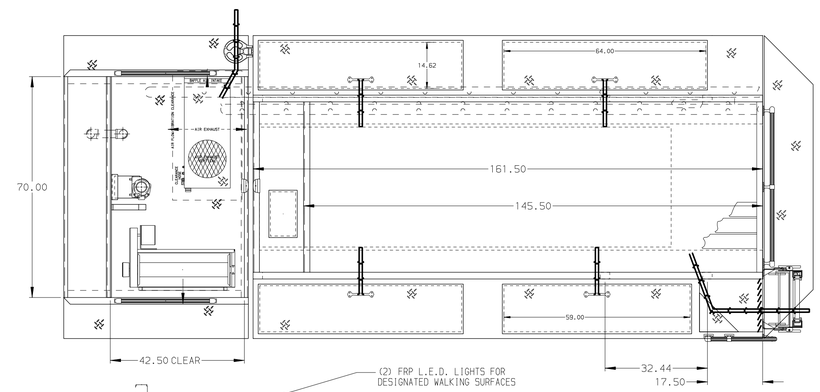

HOSEBED CAPACITIES
1. 300' OF 3.00" D.J. POLY HOSE
2. 1000' OF 5.00" D.J. POLY HOSE
3. OPEN AREA

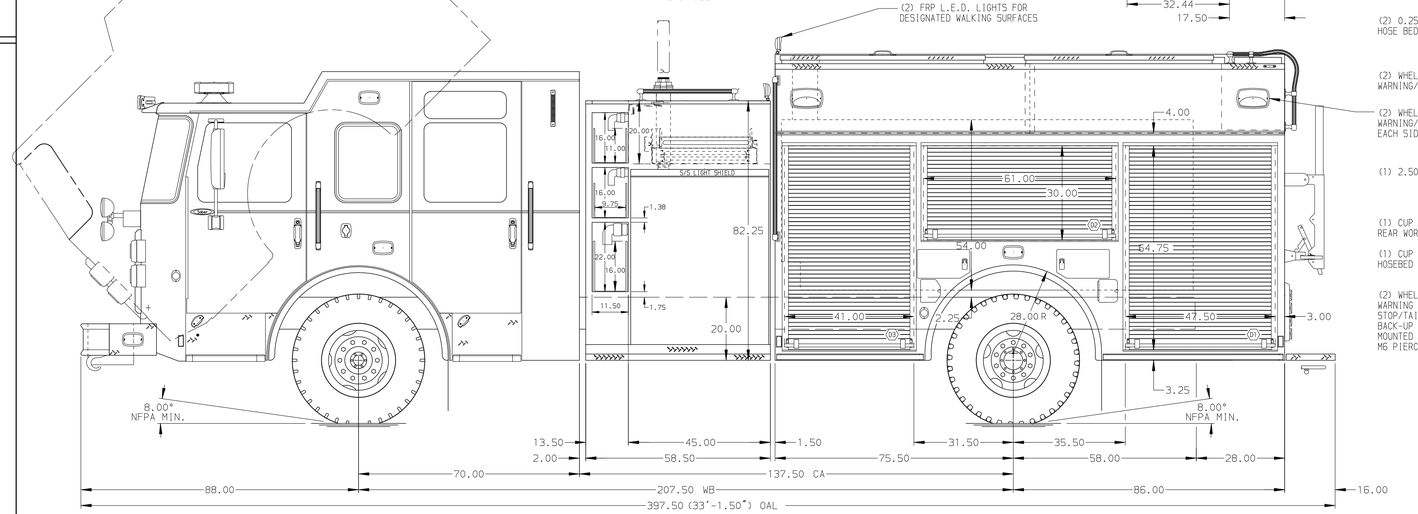

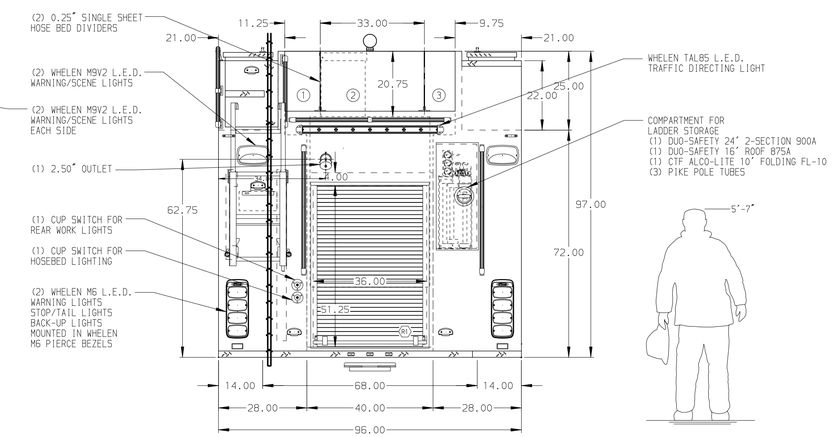

NOTE
DIMENSIONS SHOWN ARE APPROXIMATE AND ARE SUBJECT TO MINOR DEVIATIONS AS MAY OCCUR OR BE NECESSARY IN CONSTRUCTION.
MINOR DETAILS NOT SHOWN.

REV	DATE	BY	CH
B	11NOV16	COL	SHE
A	21SEP16	COL	SHE

CHASSIS DATA	
MAKE	PIERCE
MODEL	SABER FR
TITLE	PIERCE PUMPER APPROVAL DRAWING –
FOR	CITY OF BAXTER FIRE DEPARTMENT BAXTER, TENNESSEE
DWG NO.	30492AD

Pierce MANUFACTURING INC.

JOB NO.	30492
SCALE	1:24
DATE	
DRAWN BY	COL
	26AUG16
CHECKED BY	KBO
	13SEP16
SHEET SIZE	D
SHEET NO.	1 OF 1

View File Created 14-NOV-2016 08:08:20