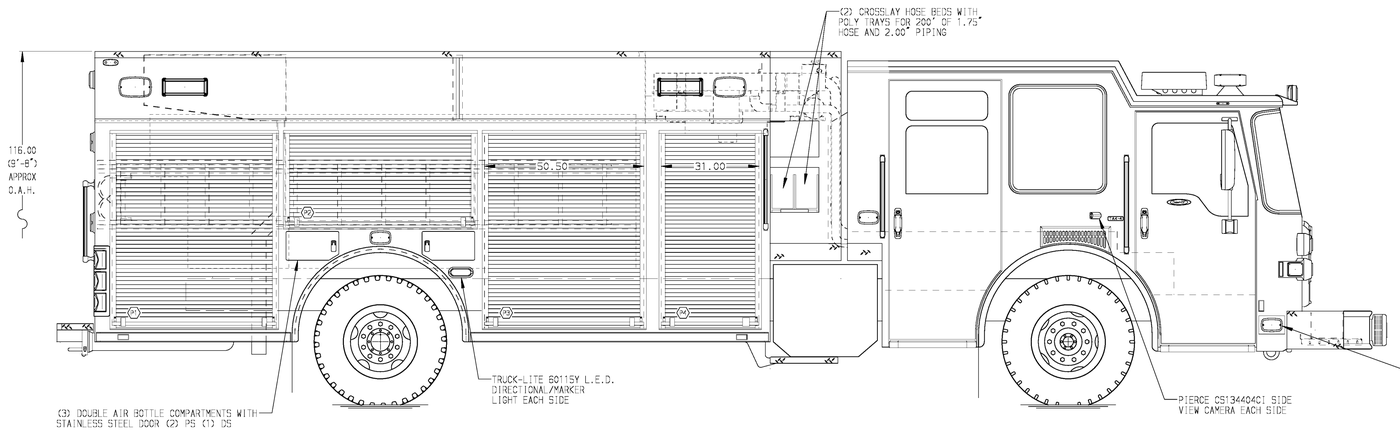

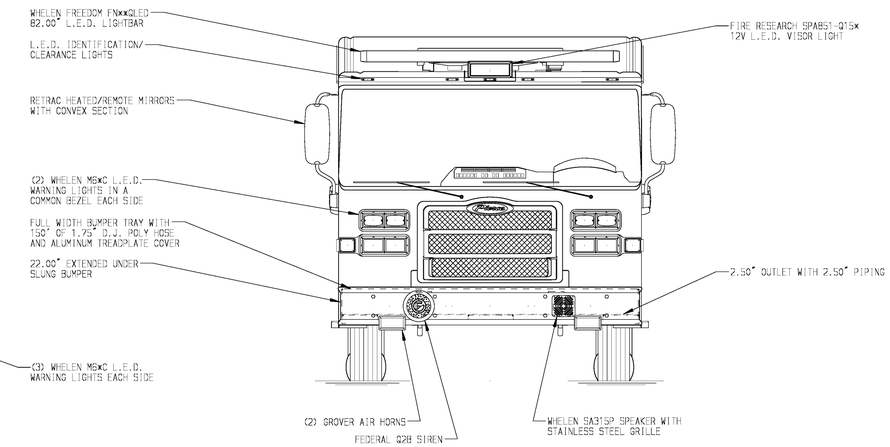

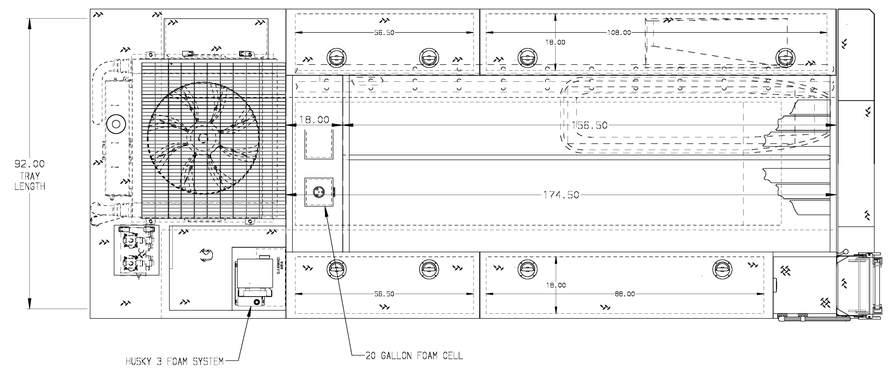

HOSEBED CAPACITIES

1. 800' OF 5.00" RUBBER HOSE
2. 300' OF 3.00" D.J. POLY HOSE

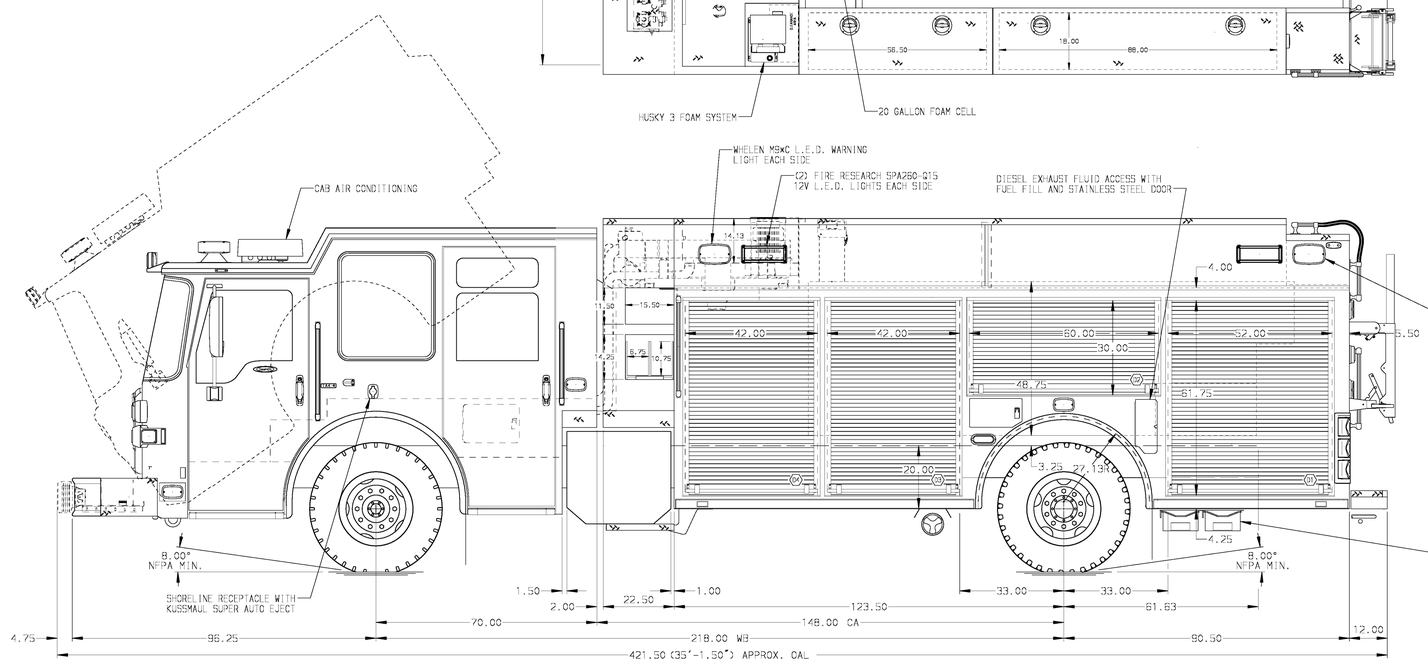

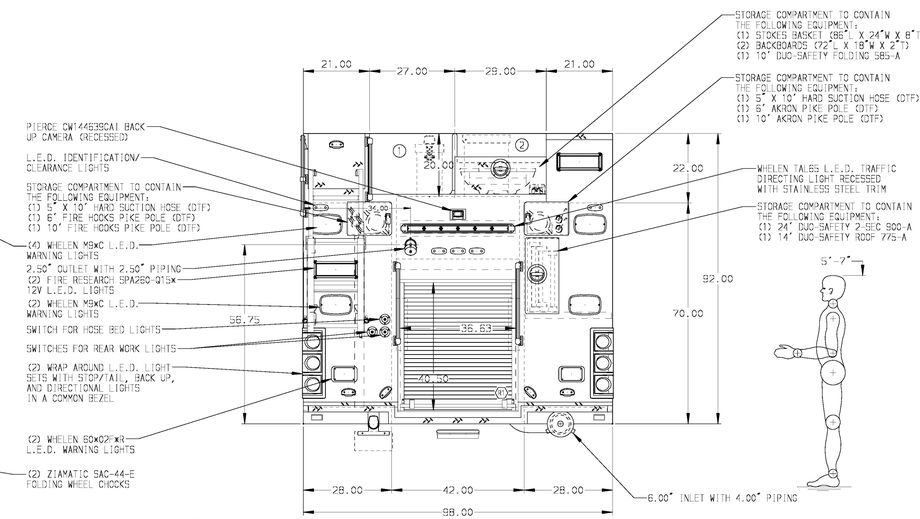

SIDE ROLL & FRONTAL IMPACT PROTECTION

ALUMINUM BODY

MAXIMUM O.A.H. 116.00"

MAXIMUM O.A.L. 424.00"

NOTE

DIMENSIONS SHOWN ARE APPROXIMATE AND ARE SUBJECT TO MINOR DEVIATIONS AS MAY OCCUR OR BE NECESSARY IN CONSTRUCTION.
MINOR DETAILS NOT SHOWN.

1. ONSPOT AUTOMATIC TIRE CHAINS TO BE PROVIDED AT REAR
2. AIR INLET WITH DISCONNECT FITTING LOCATED IN DRIVER SIDE STEP WELL
3. STAINLESS STEEL SCUFFPLATE ON EACH CAB DOOR JAMB
4. MOUNTING BASE FOR RADIO ANTENNA LOCATED PER SHOP ORDER
5. BATTERY CHARGER/COMPRESSOR LOCATED BEHIND DRIVER SEAT
6. BATTERY CHARGER INDICATOR LOCATED ON DRIVER SEAT WITH BRACKET
7. PERIMETER SCENE LIGHTS LOCATED PER SHOP ORDER
8. 12V L.E.D. LIGHT STRIP LOCATED ON EACH SIDE IN THE HOSEBED
9. PIERCE L.E.D. LIGHT STRIPS LOCATED IN ALL SPECIFIED BODY COMPARTMENTS
10. PIERCE L.E.D. LIGHT STRIPS IN ALL SPECIFIED HATCH COMPARTMENT
11. 500 LB. ADJUSTABLE FULL WIDTH/DEPTH SHELVES WITH 2" SIDES IN COMPARTMENT-ONE IN P1, P2,P3,R1;THREE IN D1
12. 500 LB. ADJUSTABLE SLIDE-OUT TRAYS WITH 2" SIDES IN COMPARTMENT-D4,P1,P3
13. 215 LB. ADJUSTABLE TILT/SLIDE-OUT TRAYS IN COMPARTMENT-D4
14. 500 LB. FLOOR MOUNTED SLIDE-OUT TRAYS WITH 2" SIDES IN COMPARTMENT-D1,D4,P1,P3,R1
15. SWING OUT TOOL GRID SYSTEM IN COMPARTMENT-D2
16. ADJUSTABLE SLIDE-OUT TOOLBOARDS WITH PEGBOARD PATTERN IN COMPARTMENT-TWO IN D3
17. STORAGE RACK FOR (6) AIR BAGS IN COMPARTMENT-D1
18. VERTICAL PARTITION IN COMPARTMENT-P1
19. FIVE POLY TOOL BOXES IN COMPARTMENT-D1
20. STF DRI-DECK MATTING WITH BEVEL ON FLOOR IN ALL SPECIFIED BODY COMPARTMENTS
21. STF DRI-DECK MATTING LOCATED ON SHELVES AND TRAYS IN ALL SPECIFIED BODY COMPARTMENTS
22. 200 LB. CAPACITY OIL DRY HOPPER IN HATCH COMPARTMENT ABOVE P1
23. ONE 120V DUPLEX RECEPTACLE IN COMPARTMENT-D1,D2,D3,D4,P1,P2,P3

REV	DATE	BY	CH
V	08SEP15	BST	MSA
V	19AUG15	BST	CDU
V	28JUL15	BST	MSA
V	19MAY15	BST	CDU

CHASSIS DATA
MAKE: PIERCE
MODEL: DASH CF

Pierce MANUFACTURING INC.

TITLE: 1500-D-1020P; 1000 GAL. WATER/20 GAL. FOAM 214" PUC RESCUE BODY; LADDERS THRU BODY; (2) X-LAYS

FOR: BIG FLATS FIRE DISTRICT #1 BIG FLATS, NY

DWG NO.: 28898AD

JOB NO.	28898
SCALE	1:24
DATE	
DRAWN BY	BST 07MAY15
CHECKED BY	CDU 08MAY15
SHEET SIZE	D
SHEET NO.	1 OF 1

View File Created 11-SEP-2015 07:05:45