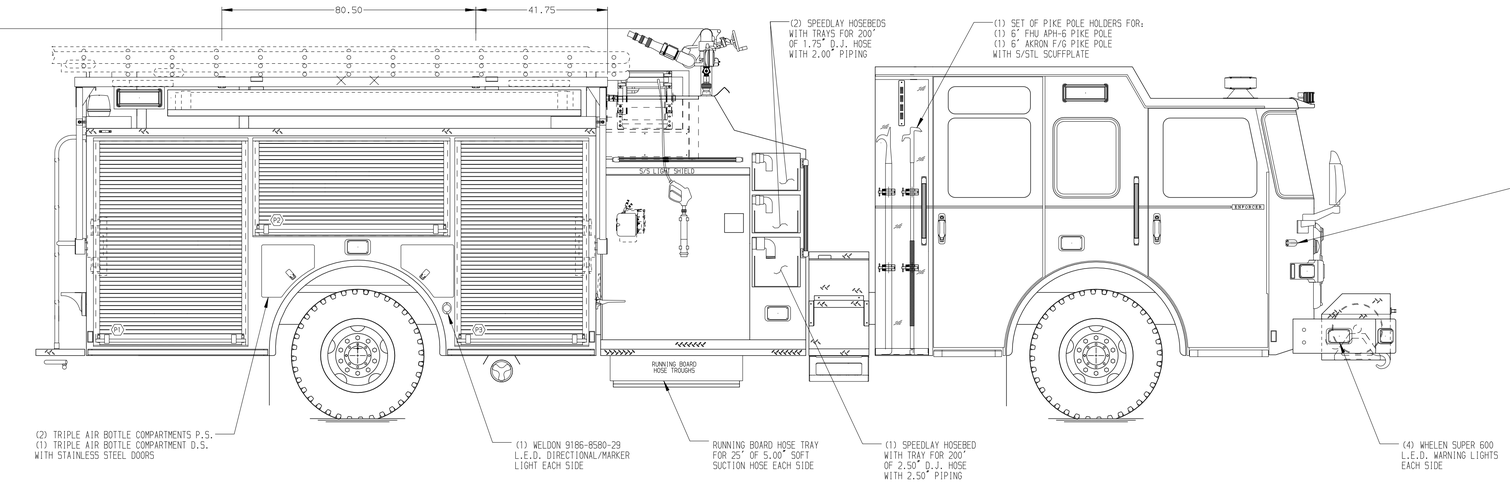

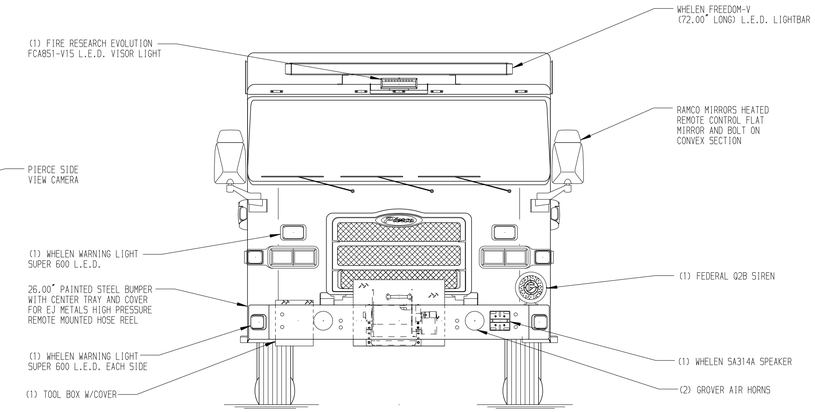

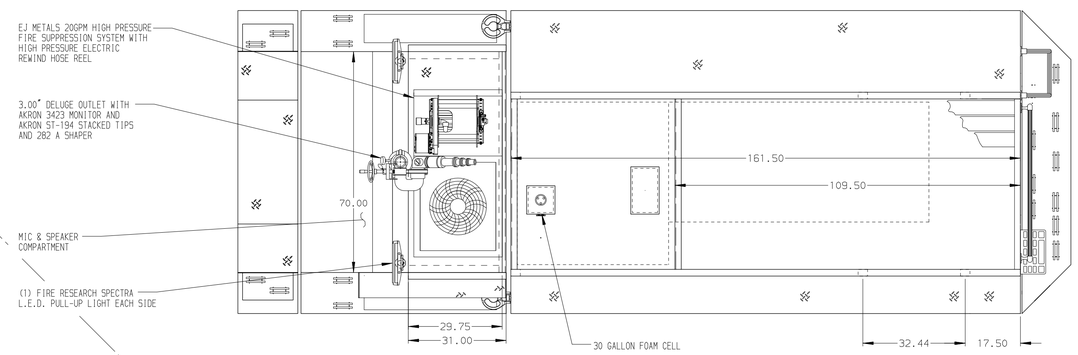

HOSEBED CAPACITIES
1. 500' OF 2.50" HOSE
2. 1000' OF 5.00" HOSE
3. 500' OF 2.50" HOSE

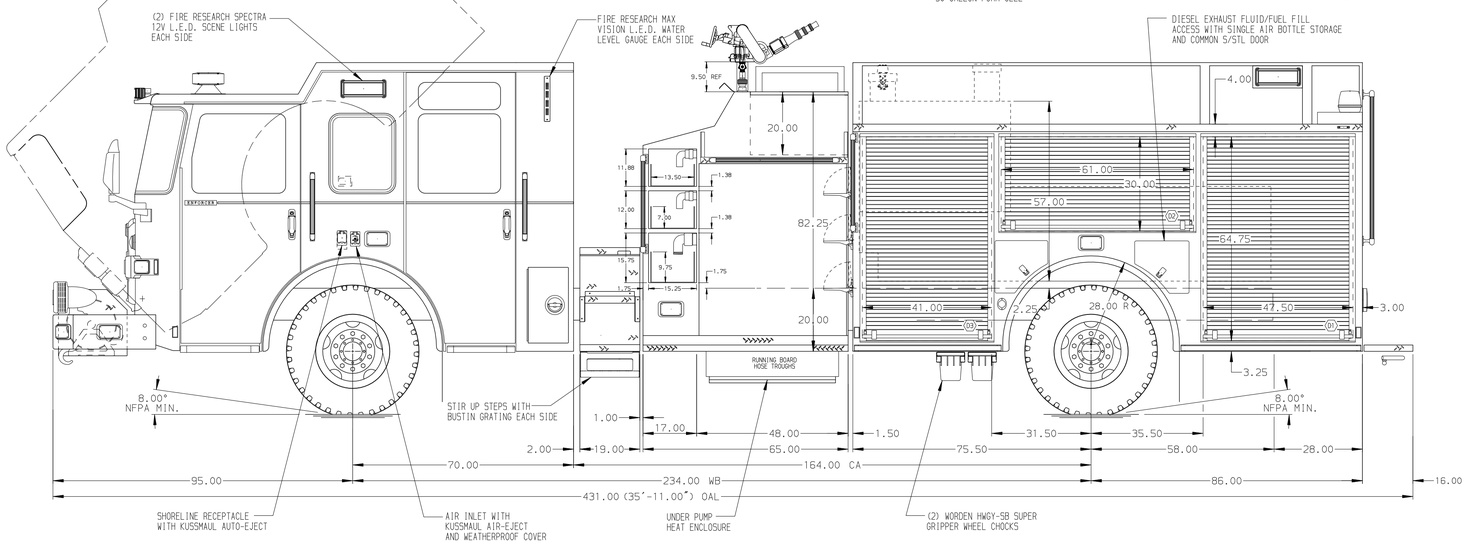

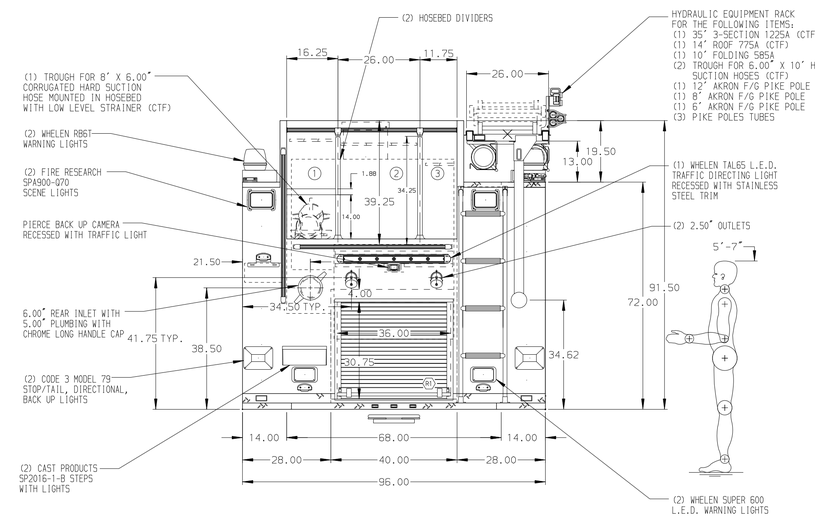

ALUMINUM BODY

SIDE ROLL AND FRONTAL IMPACT PROTECTION

NOTE

DIMENSIONS SHOWN ARE APPROXIMATE AND ARE SUBJECT TO MINOR DEVIATIONS AS MAY OCCUR OR BE NECESSARY IN CONSTRUCTION.
MINOR DETAILS NOT SHOWN.

1. INSTA-CHAIN AUTOMATIC TIRE CHAINS TO BE PROVIDED AT REAR
2. BATTERY CHARGER LOCATED BEHIND DRIVER SEAT
3. BATTERY CHARGER INDICATOR BEHIND DRIVER'S SEAT DISPLAYED THROUGH WINDOW
4. PULL STRAP ON ALL SIDE COMPARTMENT DOORS
5. THREE ADDITIONAL POLY TRAYS SHIPPED LOOSE
6. AIR OUTLET WITH SHUT OFF VALVE ON THE P.S. PUMP PANEL
7. THREE DUPLEX RECEPTACLES WITH PRESET TIMERS LOCATED IN THE CAB
8. FULL WIDTH/DEPTH ADJUSTABLE SHELVES TWO IN D1 AND ONE IN D3
9. ONE ADJUSTABLE SLIDE OUT TRAY IN P3
10. ONE TILT/ SLIDE OUT TRAY IN P1,P2,P3
11. ONE FLOOR MOUNTED SLIDE OUT TRAY IN P1
12. SWING OUT ALUMINUM TOOLBOARD IN D2
13. ONE ADJUSTABLE VERTICAL PARTITION IN D3

REV	DATE	BY	CH
V	16MAY16	LST	JBO
V	16MAR16	LST	JBO
V	17FEB16	LST	JBO

CHASSIS DATA
MAKE: PIERCE
MODEL: ENFORCER

Pierce MANUFACTURING INC.

TITLE: 1750-D-780P, 750G WATER W/30G FOAM CELL; 161" PUMPER (3) SPEEDLAYS; HYDRAULIC LADDER RACK; DELUGE
FOR: BRODHEAD FIRE DEPARTMENT
BRODHEAD, WISCONSIN
DWG NO.: 29629AD

JOB NO.	SCALE	DRAWN BY	CHECKED BY	SHEET SIZE	SHEET NO.
29629	1:24	DDO	MGE	D	1 OF 1
	DATE	08DEC15	09DEC15		

View File Created 16-MAY-2016 14:41:18