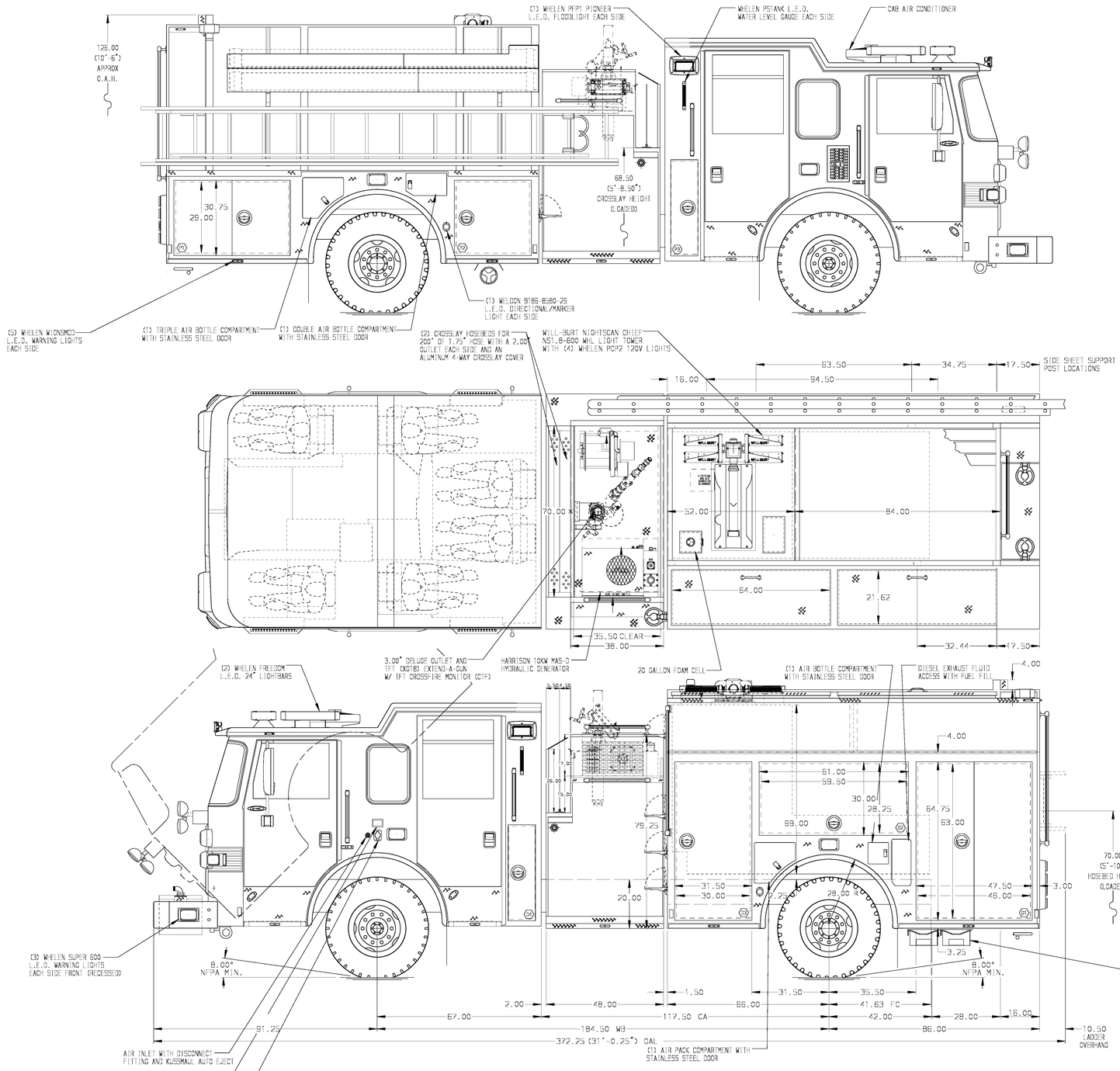

ALUMINUM BODY

SIDE ROLL AND FRONTAL IMPACT PROTECTION

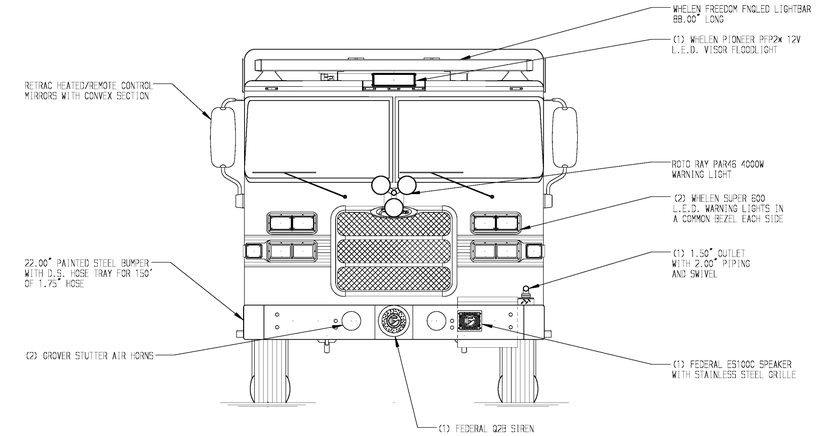

HOSEBED CAPACITIES

1. 200' OF 2.50" D.J. HOSE
2. 300' OF 1.75" D.J. HOSE
3. 1200' OF 5.00" D.J. HOSE
4. 200' OF 2.50" D.J. HOSE
5. 200' OF 1.75" D.J. HOSE
6. 300' OF 3.00" D.J. HOSE

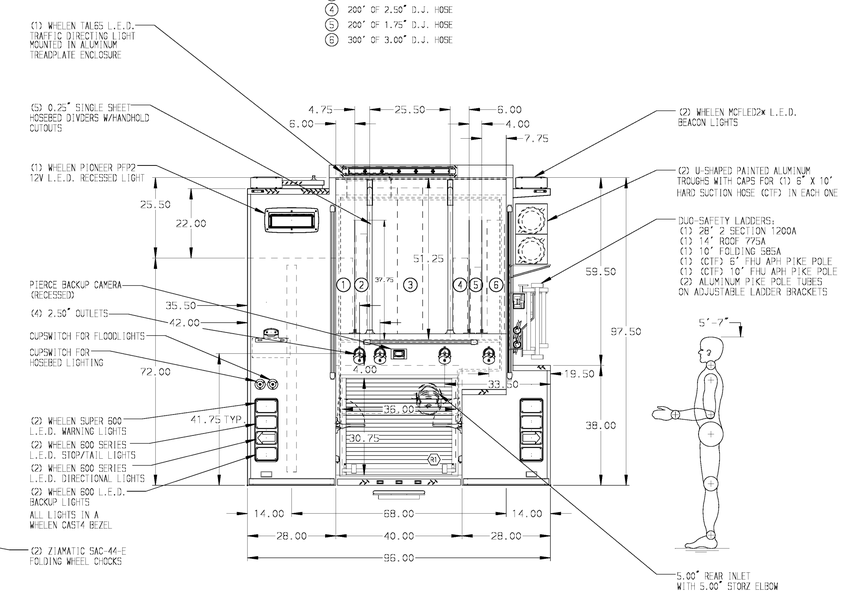

NOTE

DIMENSIONS SHOWN ARE APPROXIMATE AND ARE SUBJECT TO MINOR DEVIATIONS AS MAY OCCUR OR BE NECESSARY IN CONSTRUCTION.
MINOR DETAILS NOT SHOWN.

1. BATTERY CHARGER MOUNTED BEHIND PASSENGER'S SIDE SEAT
2. ONE 12V L.E.D. LIGHT STRIP LOCATED ON EACH SIDE IN THE HOSEBED
3. 5/5TL SCUFFPLATE ON REAR OUTER CORNER OF BODY
4. REVERSED HINGED DOOR ON D3
5. DRIP PAN GUARD FOR ROLL-UP DOOR IN R1
6. FULL WIDTH/DEPTH PAINTED ADJUSTABLE SHELF TWO IN D3 AND ONE IN D1,P1,P2
7. ONE ADJUSTABLE TILTING SLIDE-OUT TRAY IN D2
8. ONE FLOOR MOUNTED SLIDE-OUT TRAY IN D1,D3,P1,P2
9. CIRCUIT BREAKER PANEL IN D3
10. ONE HANNAY ELECTRIC REWIND CORD REEL MODEL 1618-17-18 WITH 200' OF WITH QTY' OF 10/4 CABLE IN P.S. CARGO AREA
11. (1) 120V DUPLEX RECEPTACLE BEHIND THE DRIVERS AND OFFICERS SEATS

REV	DATE	BY	CH
7	06NOV15	LST	GHO
6	25SEP15	LST	MGE

CHASSIS DATA
MAKE: PIERCE
MODEL: ARROW XT

Pierce MANUFACTURING INC.

TITLE: 1500-D-750P W/20 GAL FOAM CELL,152" FH FD DS, LOW PS (2) XLAYS, LADDERS ON SIDE, DELUGE, GENERATOR, REEL
FOR: CAMP HILL FIRE COMPANY NO. 1, CAMP HILL, PENNSYLVANIA
DWG NO.: 29410AD

JOB NO.	SCALE	DRAWN BY	CHECKED BY	SHEET SIZE	SHEET NO.
29410	1:24	LST	CSH	D	1 OF 1

DATE: 14SEP15
DATE: 15SEP15

View File Created 06-NOV-2015 09:42:18