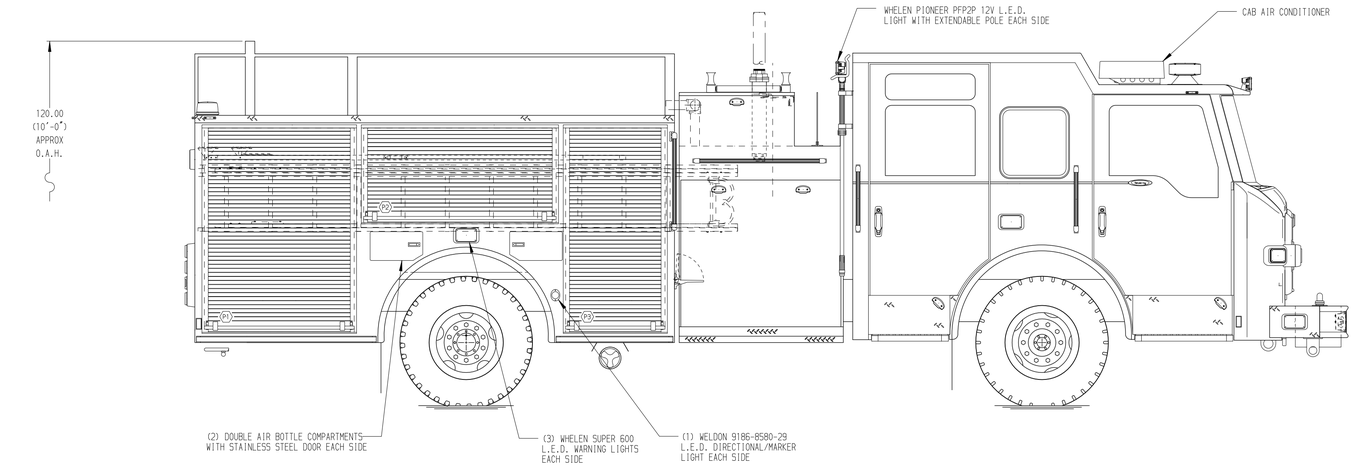

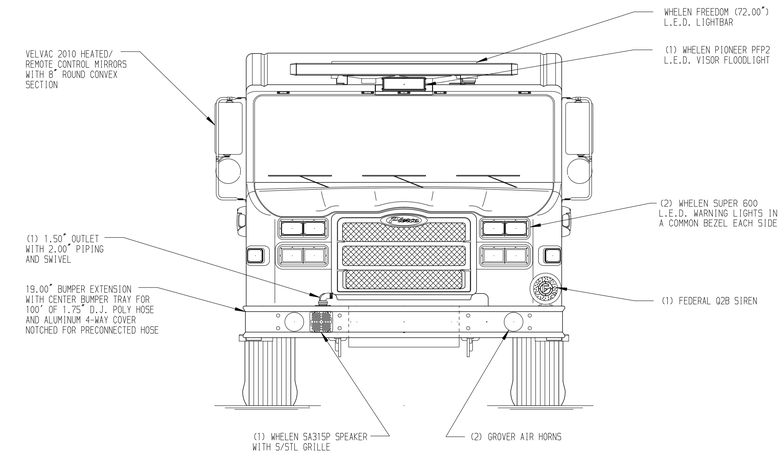

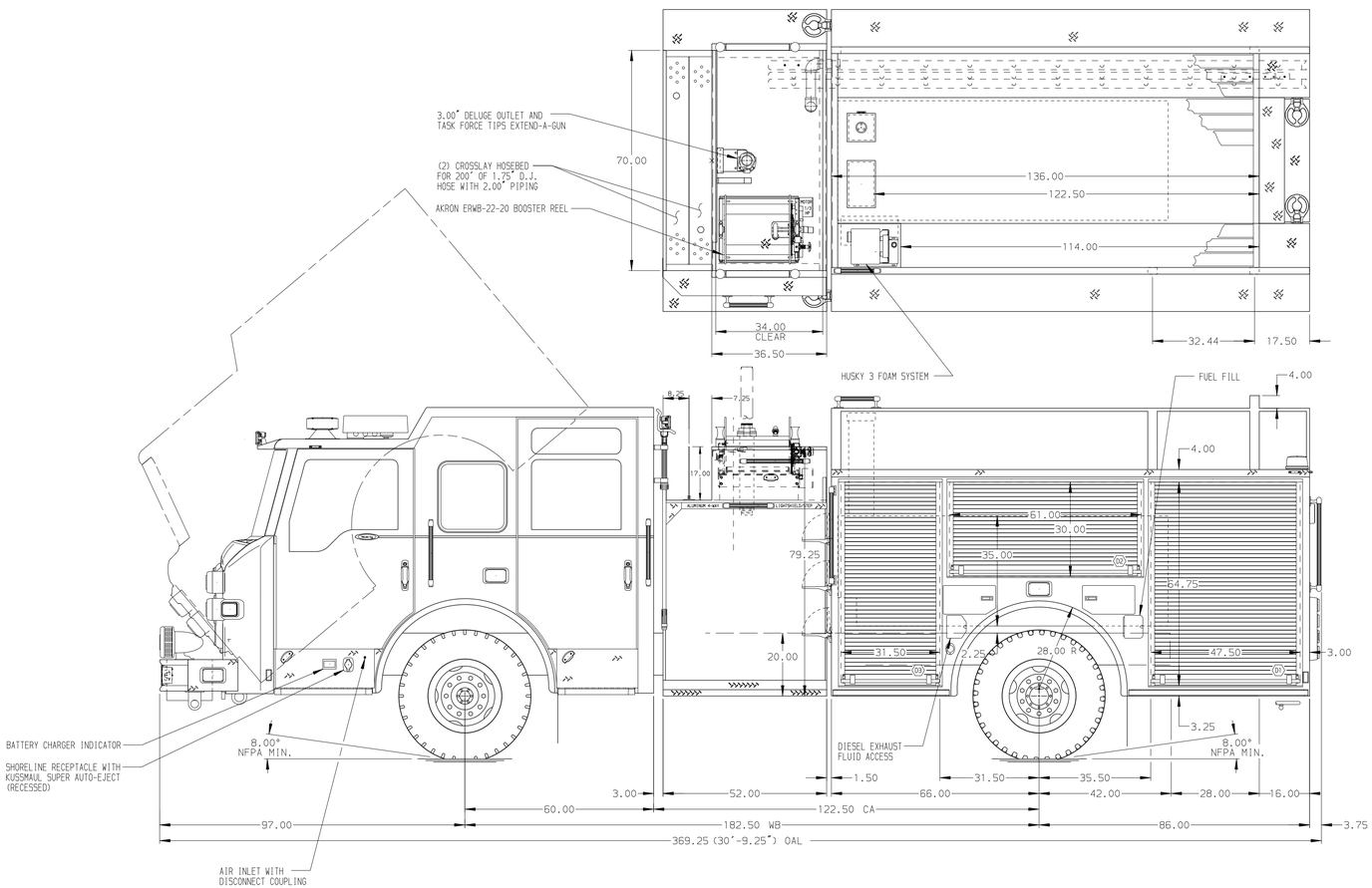

HOSEBED CAPACITIES

1. 200' OF 2.50" D.J. POLY
2. 200' OF 1.75" D.J. POLY
3. 1500' OF 5.00" D.J. POLY
4. 600' OF 3.00" D.J. POLY
5. 200' OF 3.00" D.J. POLY

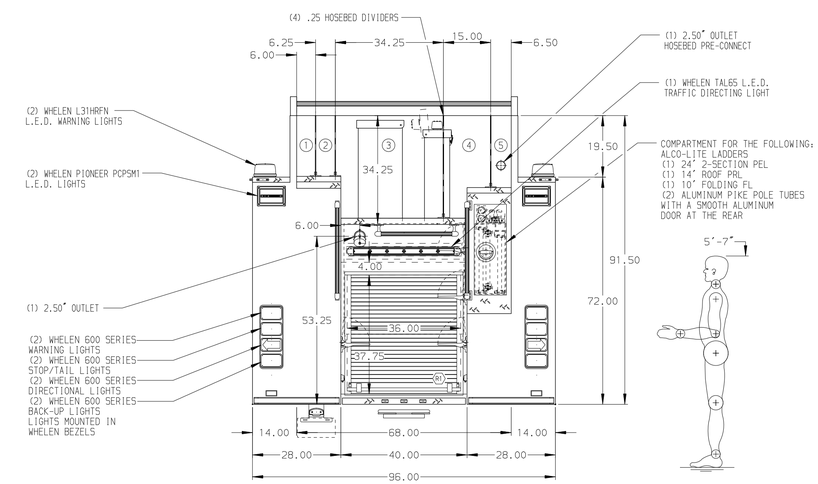

ALUMINUM BODY

NOTE

DIMENSIONS SHOWN ARE APPROXIMATE AND ARE SUBJECT TO MINOR DEVIATIONS AS MAY OCCUR OR BE NECESSARY IN CONSTRUCTION.
MINOR DETAILS NOT SHOWN.

1. BATTERY CHARGER LOCATED IN COMPARTMENT D3
2. ONE FULL WIDTH/DEPTH PAINTED ADJUSTABLE SHELF IN COMPARTMENTS D1,D2, D3, P2, AND R1 WITH TWO IN P3
3. ONE FLOOR MOUNTED SLIDE-OUT TRAY IN COMPARTMENT P1
4. PARTITION BETWEEN COMPARTMENTS D1/R1
5. AIR OUTLET WITH SHUT OFF VALVE ON THE D.S. PUMP PANEL
6. S/STL SCUFFPLATES ON EACH SIDE OR THE REAR CORNERS OF THE BODY
7. ONE DRI-DECK MATTING IN COMPARTMENTS D1, D2, D3, P2, AND P3
8. ALUM TREADPLATE ON FLOOR OF R1

REV	DATE	BY	CH
3	31MAR16	TES	JGO
2	21MAR16	TES	JGO
1	18FEB16	TES	TWH

CHASSIS DATA
MAKE: PIERCE
MODEL: VELOCITY

Pierce MANUFACTURING INC.

TITLE: 1500-D-460P W/40G FOAM, 152" BODY, FHFD DS FDLER PS (2) XLAYS, LADDERS THROUGH BODY, DELUGE, HUSKY 3

FOR: CENTER POINT FIRE DEPARTMENT
BIRMINGHAM, ALABAMA

DWG NO.: 29583AD

JOB NO.	29583
SCALE 1:24	DATE
DRAWN BY TES	11DEC15
CHECKED BY KBO	11DEC15
SHEET SIZE D	SHEET NO. 1 OF 1

View File Created 31-MAR-2016 15:49:27