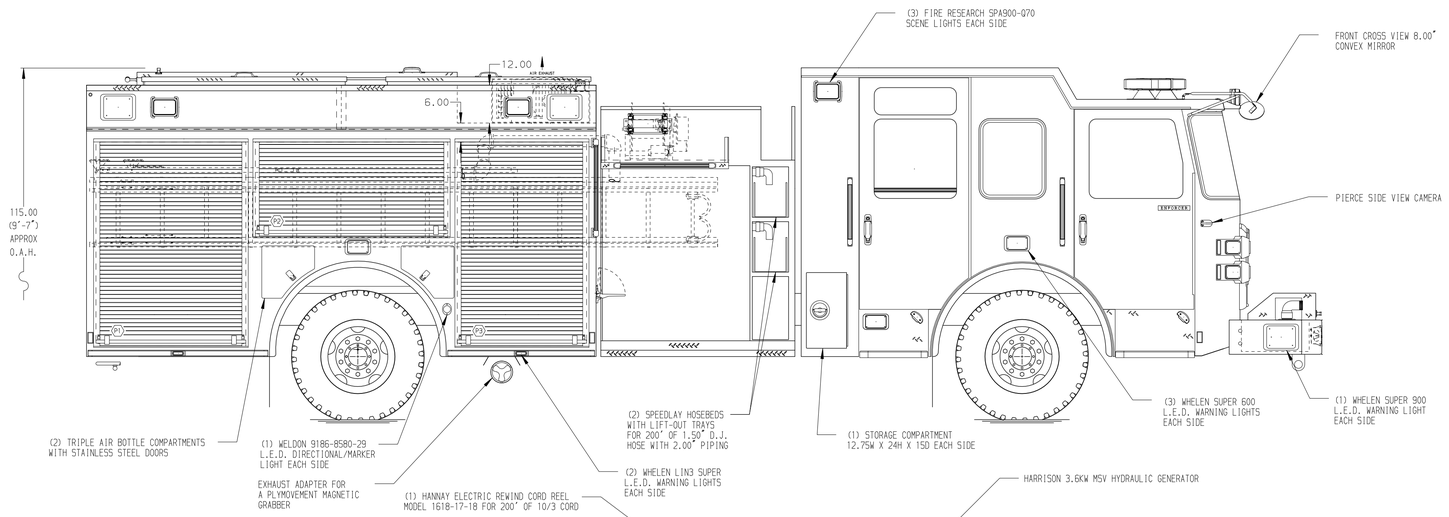

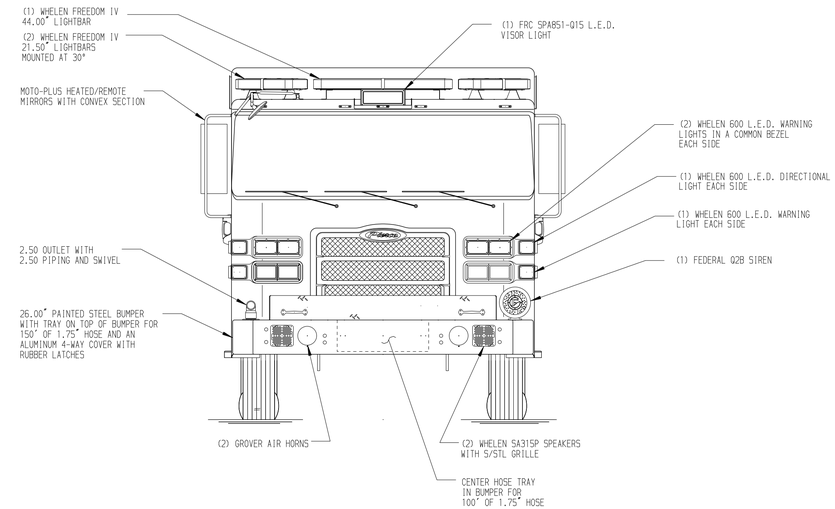

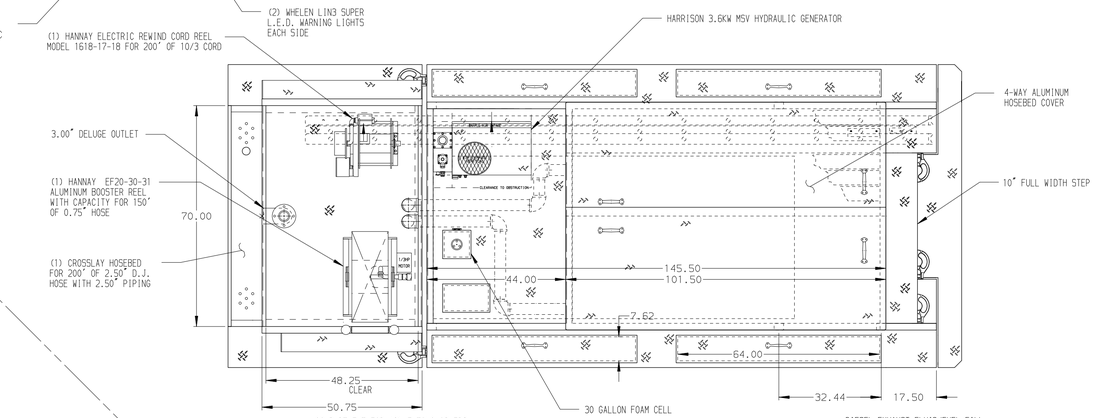

HOSEBED CAPACITIES

1. 200' OF 2.50" D.J. POLY HOSE
2. 1200' OF 5.00" D.J. POLY HOSE
3. 400' OF 2.50" D.J. POLY HOSE
4. 400' OF 1.75" D.J. POLY HOSE

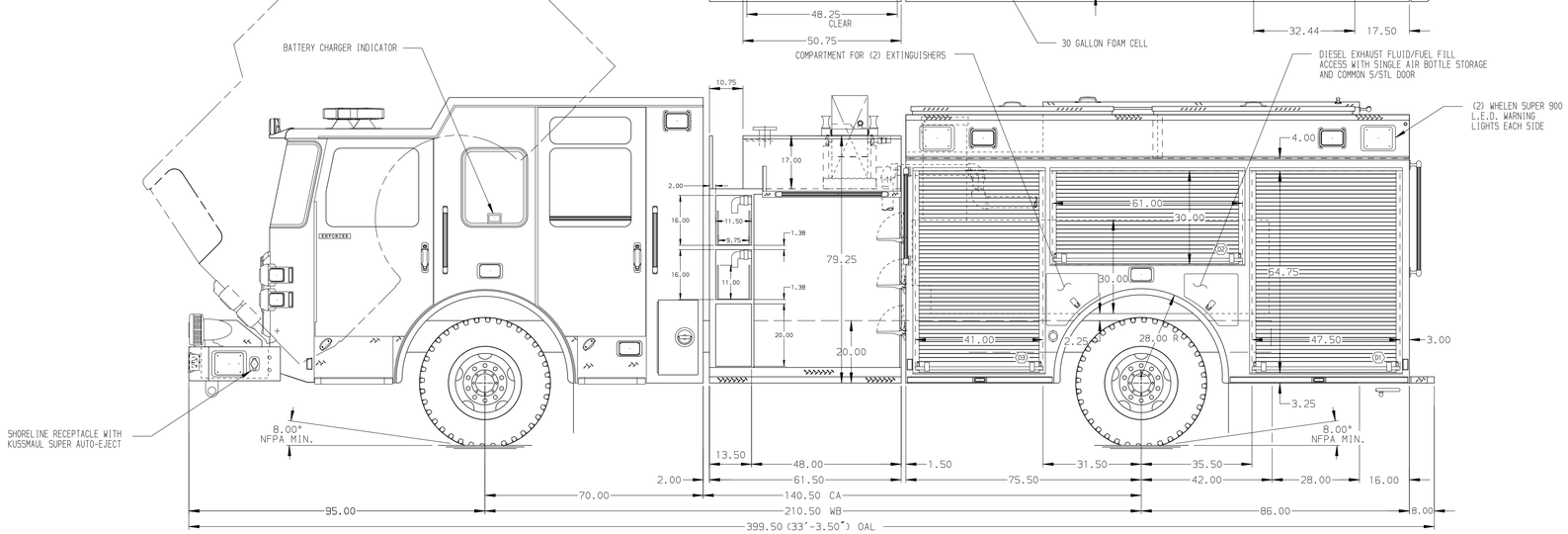

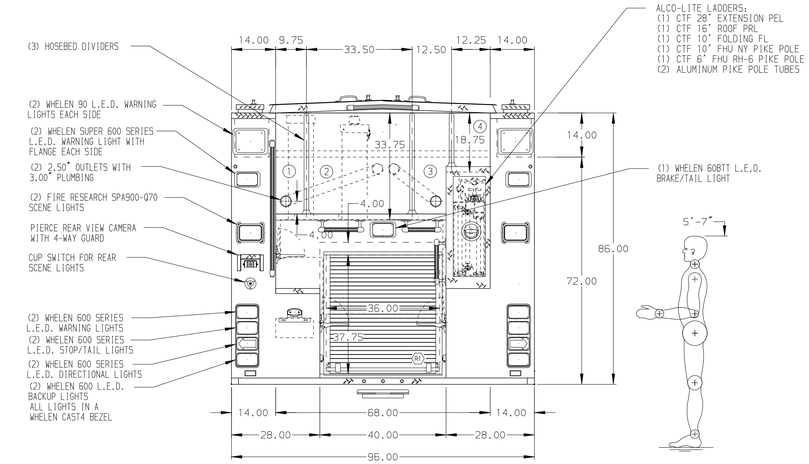

ALUMINUM BODY

SIDE ROLL AND FRONTAL IMPACT PROTECTION

NOTE

DIMENSIONS SHOWN ARE APPROXIMATE AND ARE SUBJECT TO MINOR DEVIATIONS AS MAY OCCUR OR BE NECESSARY IN CONSTRUCTION.
MINOR DETAILS NOT SHOWN.

1. CTF WHEEL CHOCKS AND MOUNTING BRACKETS
2. KUSSMAUL BATTERY CHARGER LOCATED BEHIND DRIVER SEAT
3. ONE L.E.D. LIGHT STRIP LOCATED ON EACH SIDE IN THE HOSEBED
4. ONE ADJUSTABLE FULL WIDTH/DEPTH SHELF IN COMPARTMENTS D1, D2, D3, P1, P3, AND R1
5. ONE FLOOR MOUNTED SLIDE-OUT TRAY IN COMPARTMENTS D3, P3, AND R1
6. ONE SWING-OUT ALUMINUM TOOL BOARD IN COMPARTMENT P2
7. ONE HORIZONTAL EQUIPMENT MOUNTING TRACK IN COMPARTMENTS D1, D3, P1, AND P3
8. ONE DUPLEX RECEPTACLE LOCATED IN THE EMS COMPARTMENT, D1, AND P1
9. CIRCUIT BREAKER PANEL IN COMPARTMENT D3
10. ONE ALUMINUM TREADPLATE JUNCTION BOX HOLDER SHIPPED LOOSE
11. AUTOMATIC TIRE CHAINS
12. AIR INLET/OUTLET W/DISCONNECT COUPLING ON D5 PUMP PANEL

REV	DATE	BY	CH
3	06JUL16	MWA	GHO
2	06JUN16	MWA	WKL
1	01JUNE16	MWA	GHO

CHASSIS DATA
MAKE: PIERCE
MODEL: ENFORCER

Pierce MANUFACTURING INC.

TITLE: 1500-D-500P W/30G FOAM,161",FULL HEIGHT,FDLER (2) SPD-LAYS,(1) X-LAY,DELUGE,GENERATOR,REELS
FOR: MONROE FIRE DEPARTMENT, MONROE, NC
DWG NO.: 29978AD

JOB NO.	SCALE	DRAWN BY	DATE	CHECKED BY	SHEET SIZE	SHEET NO.
29978	1:24	MWA	04APR16	WKL	D	1 OF 1

View File Created 11-JUL-2016 07:49:54