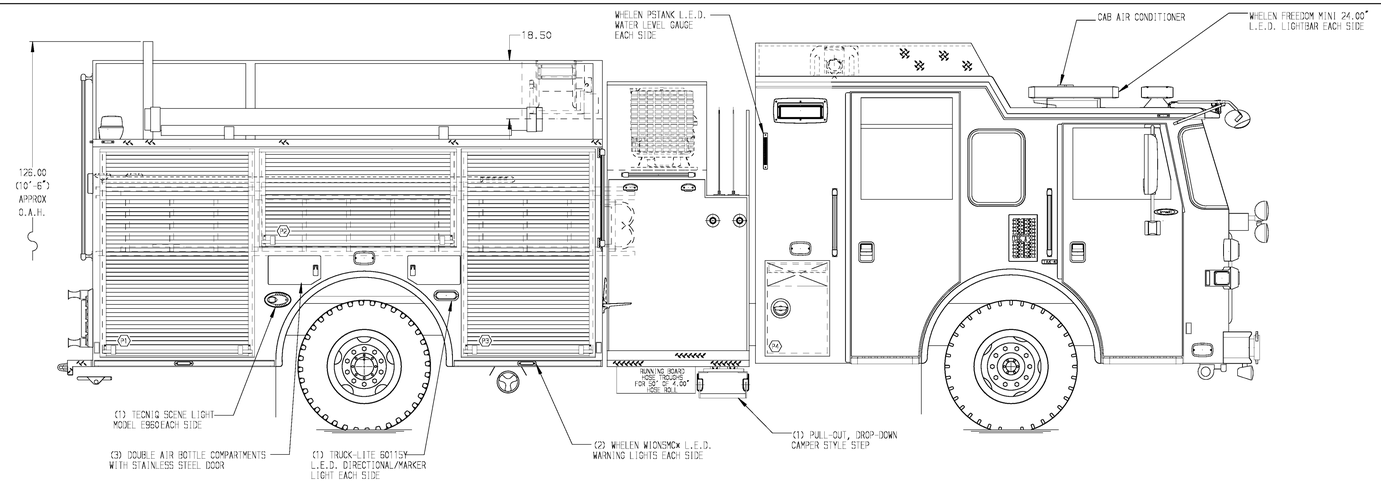

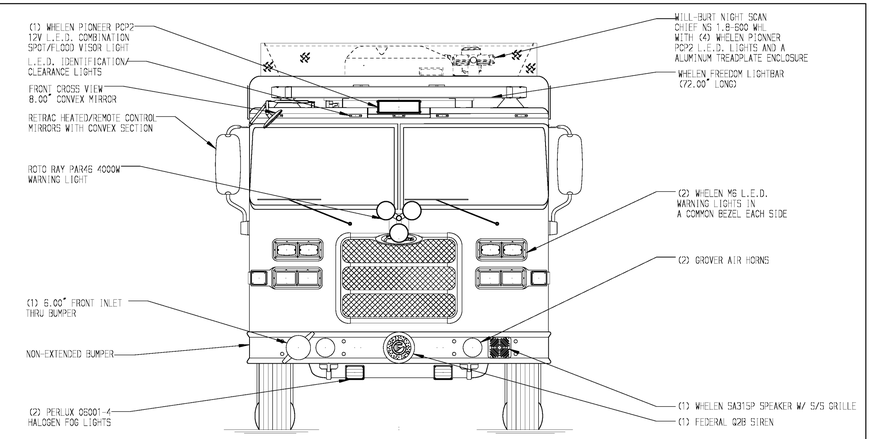

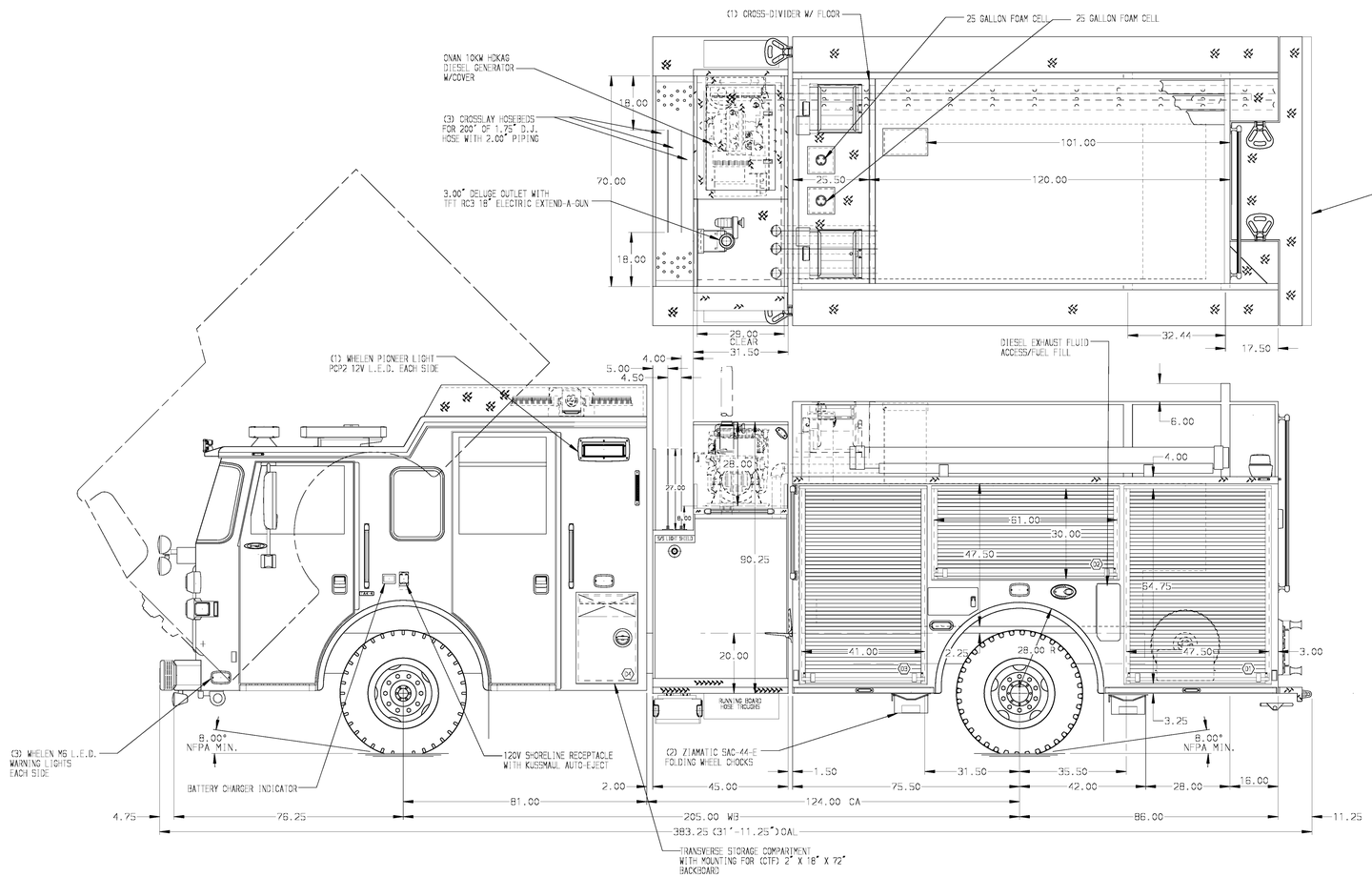

HOSEBED CAPACITIES
1. 300' OF 2.50" D.J. POLY HOSE
2. 300' OF 1.75" D.J. POLY HOSE
3. 200' OF 2.50" D.J. POLY HOSE
4. 2000' OF 4.00" D.J. POLY HOSE

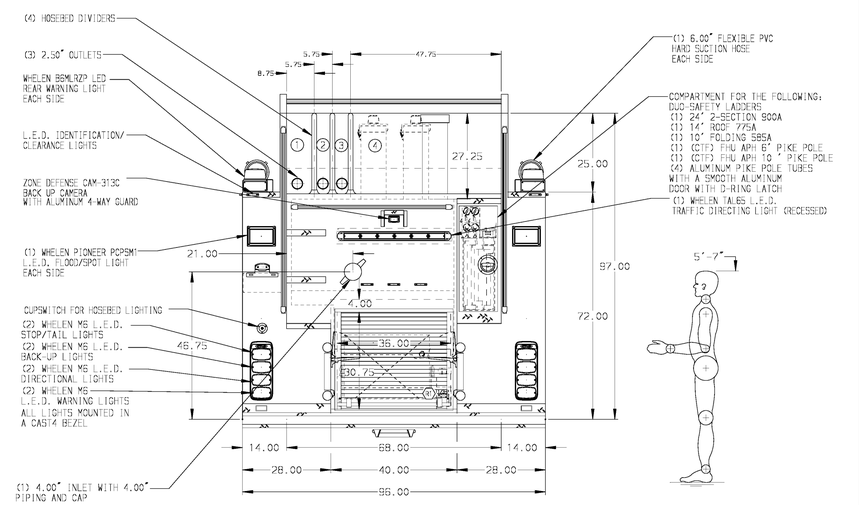

ALUMINUM BODY

SIDE ROLL AND FRONTAL IMPACT PROTECTION

NOTE

DIMENSIONS SHOWN ARE APPROXIMATE AND ARE SUBJECT TO MINOR DEVIATIONS AS MAY OCCUR OR BE NECESSARY IN CONSTRUCTION.
MINOR DETAILS NOT SHOWN.

1. INSTA-CHAIN AUTOMATIC TIRE CHAINS TO BE PROVIDED AT REAR
2. ALUMINUM TREADPLATE EXTERIOR REAR WALL OF CAB
3. 5/STL SCUFFPLATE ON EACH CAB DOOR JAMB
4. BATTERY CHARGER LOCATED BEHIND DRIVERS SEAT
5. PERIMETER SCENE LIGHTS LOCATED PER SHOP ORDER
6. ONE 12V L.E.D. LIGHT STRIP LOCATED ON EACH SIDE IN THE HOSEBED
7. PULL STRAP ON DOOR IN ALL BODY COMPARTMENTS
8. 5/STL PROTECTIVE GUARD FOR ROLL-UP DOOR IN D1,D2,D3,P1,P2,P3,R1
9. PIERCE L.E.D. DUAL COMPARTMENT LIGHT STRIPS LOCATED PER SHOP ORDER
10. PAINTED SHELF TRACKS LOCATED IN D1,P1, P3
11. FULL WIDTH/DEPTH PAINTED ADJUSTABLE SHELF (2) IN P1(1) IN D1,P3
12. ONE FLOOR MOUNTED SLIDE-OUT TRAY IN D1,P3
13. SWING-OUT TOOL BOARD WITH PEGBOARD PATTERN IN P2
14. TURTLE TILE MATTING WITH RAMP ON FLOOR IN D1,D2,D3,P1,P2,P3
15. ALL FOLDING STEPS TO BE TRIDENT WITH INTEGRATED L.E.D. LIGHT UNLESS SPECIFIED
16. FOAM PRO 2002 DUAL AGENT FOAM SYSTEM PUMP LOCATED PER SHOP ORDER
17. MOUNTED STATIONARY IN COMPARTMENT 7
18. CIRCUIT BREAKER PANEL IN D3
19. TWO AKRON ELECTRIC REWIND CORD REELS MODEL ERWC-15-10 WITH 260' OF 10/3 CABLE LOCATED ABOVE D3 AND P3
20. STAINLESS STEEL FENDER CROWNS ON CAB AND REAR BODY
21. PIERCE LOGO MUDFLAPS FRONT AND REAR
22. (2) 120V DUPLEX RECEPTACLES IN EMS CABINET
23. (2) 120V RECEPTACLE EACH SIDE REAR BODY
24. (2) AKRON JUNCTION BOXES
25. AIR INLET WITH DISCONNECT COUPLING IN D.S. STEPWELL
26. ONE ELECTRIC REWIND HANNAY BOOSTER HOSE REEL MODEL EF34-23-24 FOR 200' OF 1.00" BOOSTER HOSE IN COMPARTMENT R1
27. (2) ALUMINUM JUNCTION BOX HOLDERS
28. TURTLE TILE MATTING IN SHELVES (2) IN D1 (1) IN P1,P3
29. ALUMINUM SLIDE OUT TOOLBOARD IN D3

REV	DATE	BY	CH
7	28AUG15	LST	TWH
6	23JUL15	LST	ANG
5	22MAY15	LST	WKL

CHASSIS DATA	
MAKE	PIERCE
MODEL	ARROW XT
DWG NO.	28919AD

Pierce MANUFACTURING INC.

TITLE	1500-D-1000P W/(2) 25 GAL. FOAM CELLS, 161" FH FDLER (3) XLAYS, LDRS BESIDE TANK, DELUGE, GENERATOR, REEL
FOR	CLEAR SPRING VOLUNTEER FIRE DEPARTMENT CLEAR SPRING, MARYLAND

JOB NO.	28919
SCALE	1:24
DATE	
DRAWN BY	LST
DATE	8MAY15
CHECKED BY	WKL
DATE	18MAY15
SHEET SIZE	D
SHEET NO.	1 OF 1

View File Created 28-AUG-2015 14:59:17