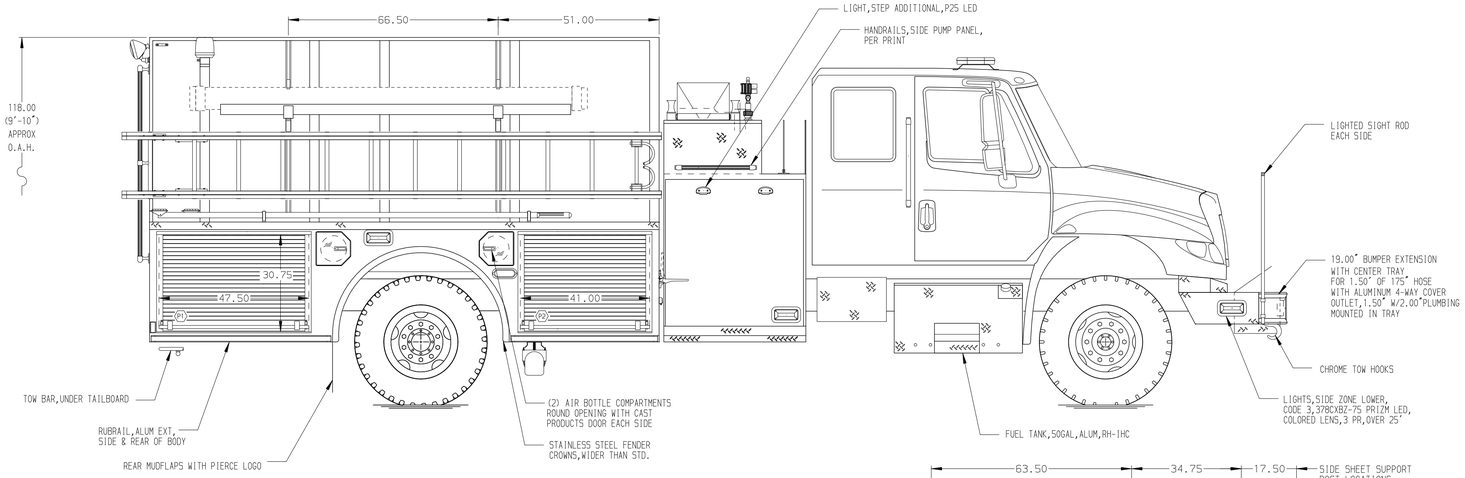

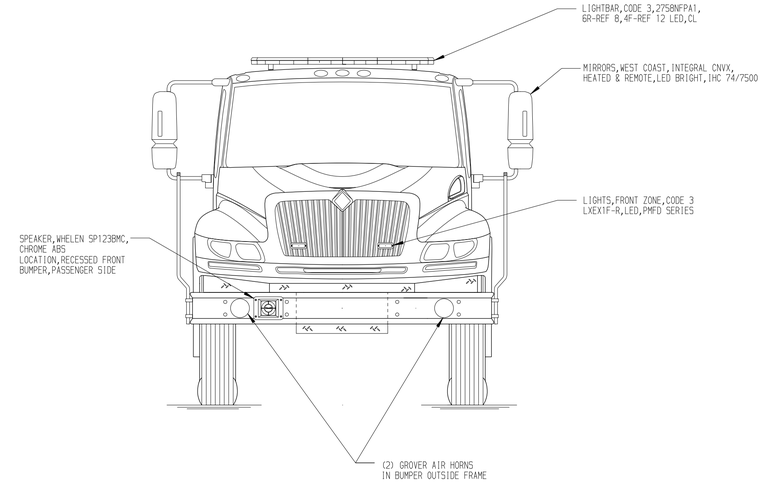

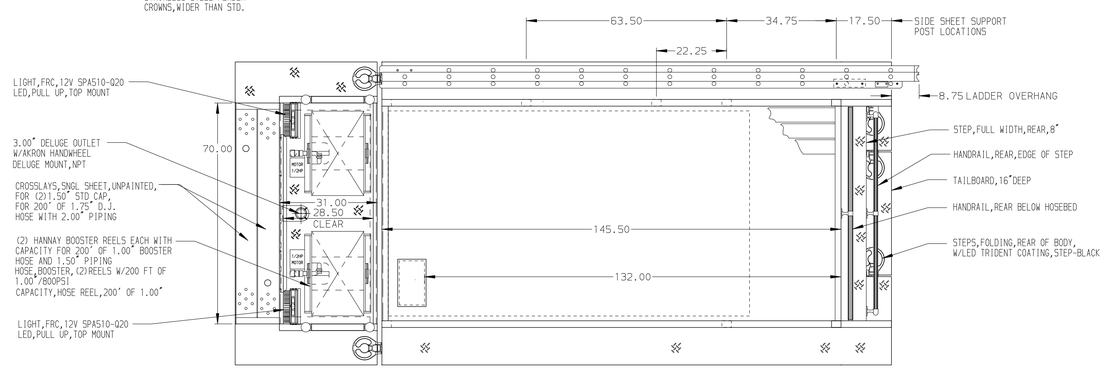

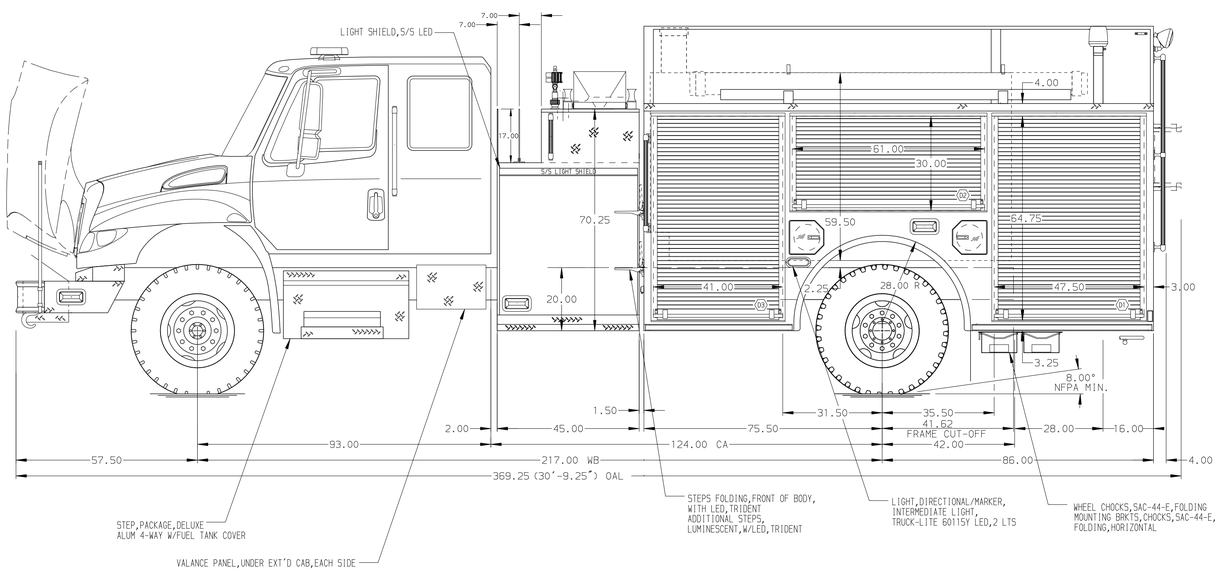

HOSEBED CAPACITIES
1. 1500' OF 2.50" D.J. POLYESTER HOSE
2. 400' OF 1.50" D.J. POLYESTER HOSE

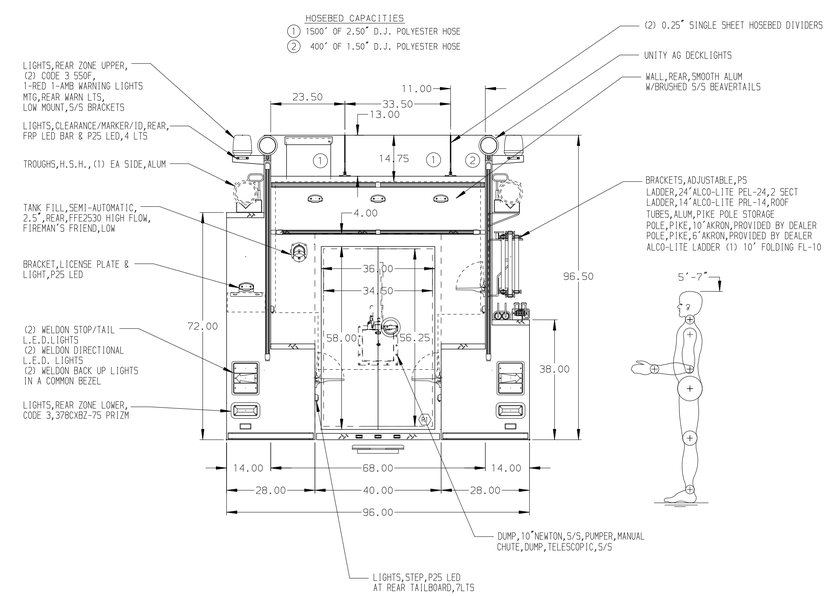

ALUMINUM BODY

NOTE
DIMENSIONS SHOWN ARE APPROXIMATE AND ARE SUBJECT TO MINOR DEVIATIONS AS MAY OCCUR OR BE NECESSARY IN CONSTRUCTION.
MINOR DETAILS NOT SHOWN.

REV	DATE	BY	CH
V	21JAN16	JLA	GSC
B	24NOV15	JLA	GSC
V	25SEP15	RWI	JAF

CHASSIS DATA
MAKE: IHC
MODEL: 4400

Pierce MANUFACTURING INC.
BRADENTON, FLORIDA

TITLE: 1250-D-1500 POLY,161"BODY,DS FULL HEIGHT PS LOW 45"SIDE CONTROL,(2)1.50"CROSSLAYS
FOR: EARLY COUNTY FIRE DEPARTMENT
BLAKELY,GEORGIA
DWG NO.: 29306AD

JOB NO.	29306
SCALE	1:24
DATE	
DRAWN BY	JAF 24AUG15
CHECKED BY	RWI 25AUG15
SHEET SIZE	D
SHEET NO.	1 OF 1

View File Created 20-JAN-2016 11:59:11