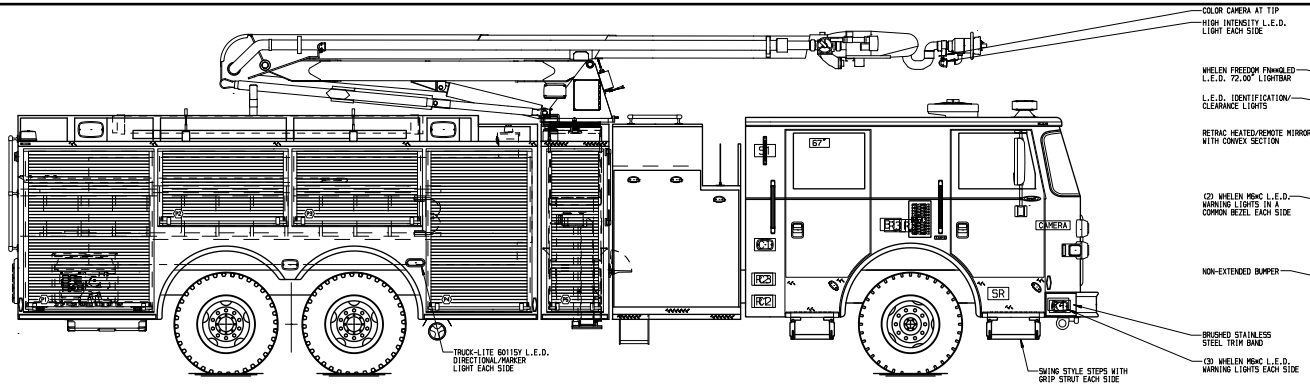

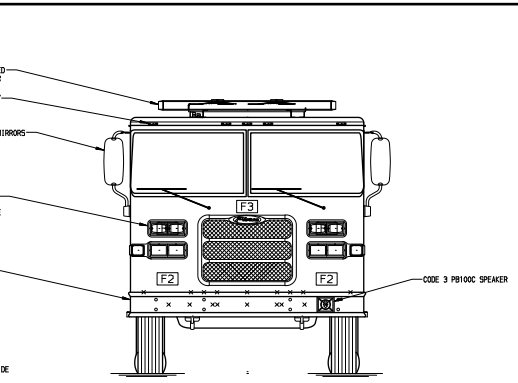

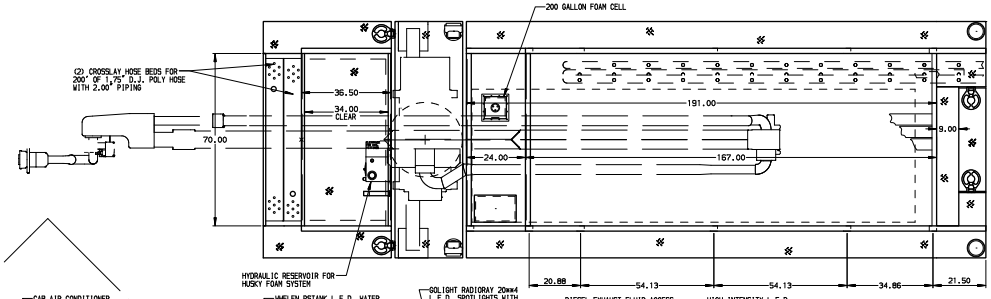

HOSEBED CAPACITIES
1. 250' OF 2.50" D.J. POLY HOSE
2. 250' OF 2.50" D.J. POLY HOSE
3. 500' OF 5.00" D.J. POLY HOSE
3. 500' OF 5.00" D.J. POLY HOSE

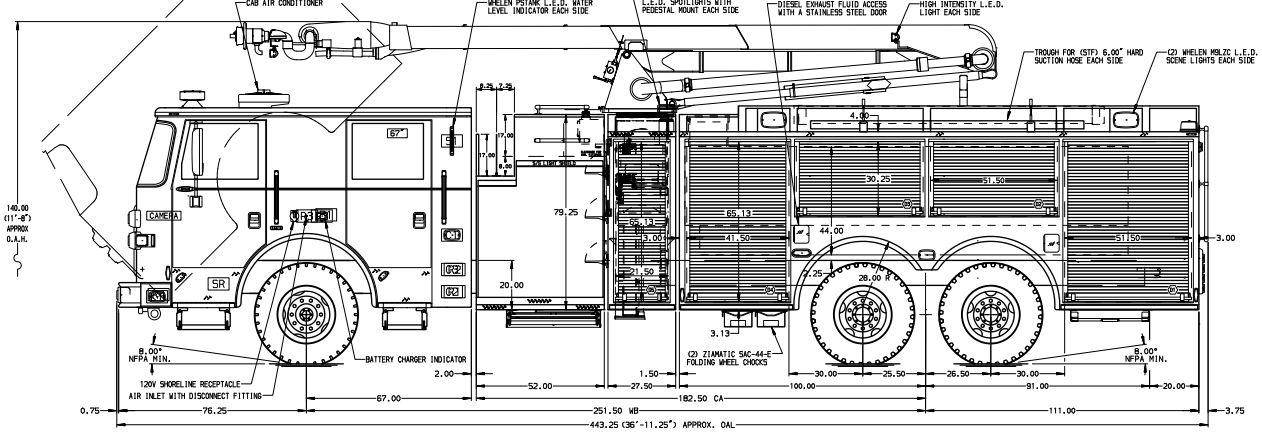

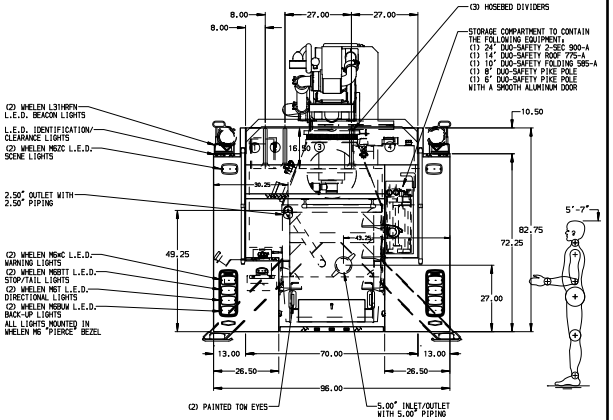

ALUMINUM BODY — MAXIMUM O.A.H. 140.00"

NOTE

DIMENSIONS SHOWN ARE APPROXIMATE AND ARE SUBJECT TO MINOR DEVIATIONS AS MAY OCCUR OR BE NECESSARY IN CONSTRUCTION. MINOR DETAILS NOT SHOWN.

1. VOGEL LUBE SYSTEM PUMP LOCATED PER SHOP ORDER
2. MOUNTING BASE FOR ANTENNA LOCATED PER SHOP ORDER
3. BATTERY CHARGER LOCATED IN COMPARTMENT-D4
4. 500 LB. FULL WIDTH/DEPTH ADJUSTABLE SHELVES IN COMPT.-ONE IN D5,P1,P4;TWO IN D1,D4
5. ONE 120V DUPLEX RECEPTACLE IN COMPARTMENT-D5
6. PERIMETER SCENE LIGHTS LOCATED PER SHOP ORDER
7. STAINLESS STEEL L-SHAPED GUARD/DRIP PAN ON COMPARTMENT-D1,D2,D3,D4,D5,P1,P2,P3,P4,P5
8. PULL STRAPS FOR DOORS IN COMPARTMENT-D2,D3,P2,P3
9. PIERCE L.E.D. LIGHT STRIPS LOCATED IN ALL SPECIFIED BODY COMPARTMENTS
10. PAINTED SHELF TRACKS LOCATED IN ALL SPECIFIED BODY COMPARTMENTS
11. 500 LB. FLOOR MOUNTED SLIDE-OUT TRAY WITH 2" SIDES IN COMPARTMENT-P1
12. HONDA EM5000 GAS POWERED GENERATOR LOCATED IN COMPARTMENT-P1
13. CIRCUIT BREAKER PANEL IN COMPARTMENT-P1
14. AERIAL PEDESTAL RAISED 2.00" FROM STANDARD
15. PAC TRAC ON THE WALL IN ALL SPECIFIED COMPARTMENTS
16. HORIZONTAL EQUIPMENT MOUNTING TRACKS IN COMPARTMENT-D2

REV	DATE	BY	CH
V	22SEP14	BST	CHR
V	27AUG14	BST	PJP
V	06JUN14	BST	JBL
V	02JUN14	BST	GRM

CHASSIS DATA — MAKE: PIERCE — MODEL: ARROWXT

Pierce MANUFACTURING INC.

TITLE: 50' AERIAL SNOZZLE AND BODY ASSEMBLY
FOR: 1450 GALLON TANK-1250 GAL. WATER/200 GAL. FOAM
EDDY COUNTY MALAGA
CARLSBAD, NM

DWG NO. 28028AD

JOB NO.	28028
SCALE 1:24	DATE
DRAWN BY BST	19MAY14
CHECKED BY GRM	20MAY14
SHEET SIZE D	SHEET NO. 1 OF 1

View File Created 26-NOV-2014 10:07:53