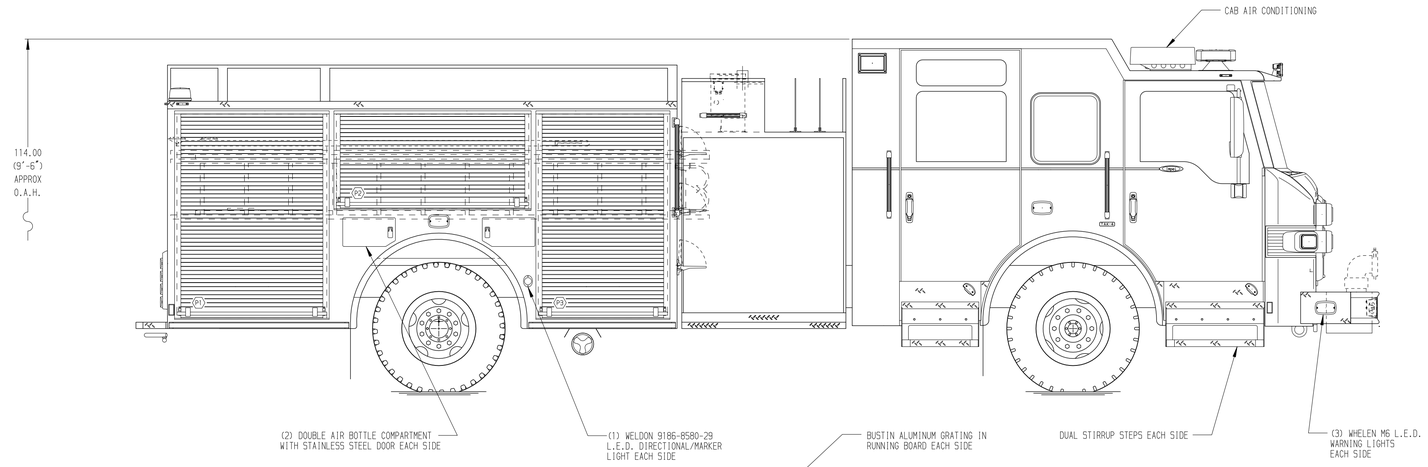

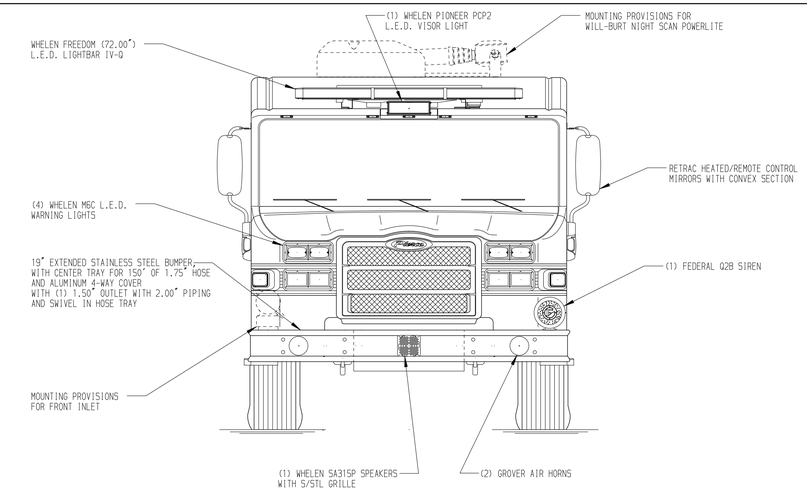

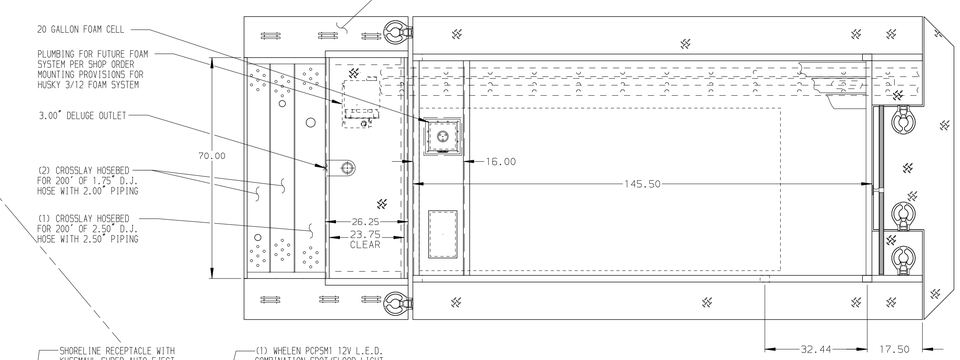

HOSEBED CAPACITIES

1. 500' OF 3.00" D.J. POLY HOSE
2. 1000' OF 5.00" D.J. POLY HOSE
3. 500' OF 3.00" D.J. POLY HOSE

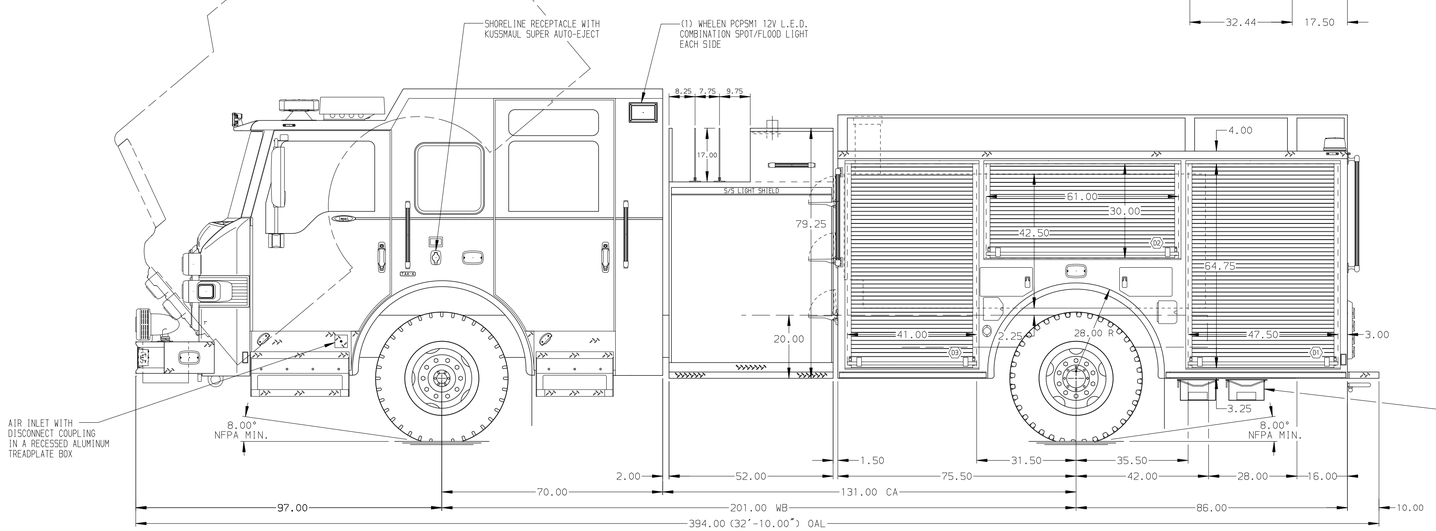

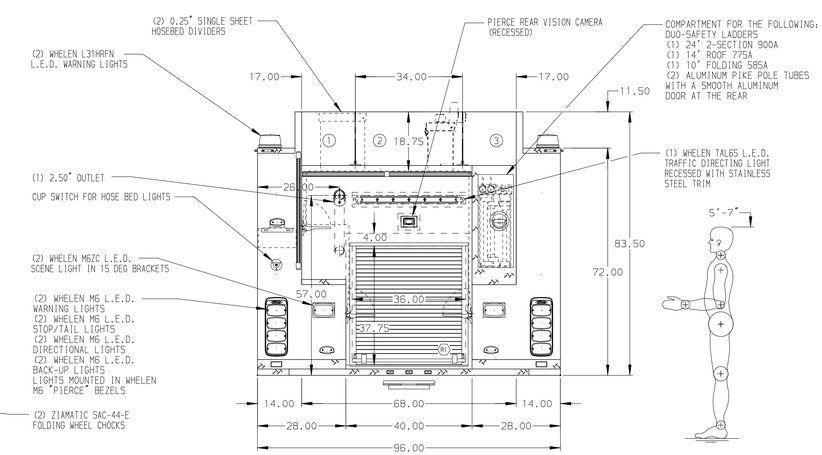

ALUMINUM BODY

SIDE ROLL AND FRONTAL IMPACT PROTECTION

NOTE

DIMENSIONS SHOWN ARE APPROXIMATE AND ARE SUBJECT TO MINOR DEVIATIONS AS MAY OCCUR OR BE NECESSARY IN CONSTRUCTION.
MINOR DETAILS NOT SHOWN.

1. BATTERY CHARGER LOCATED IN CREW CAB SEAT RISER
2. ONE 12V L.E.D. LIGHT STRIP LOCATED ON EACH SIDE IN THE HOSEBED
3. DRIP PAN GUARD FOR ROLL-UP DOOR LOCATED IN ALL BODY COMPARTMENTS
4. ONE FULL WIDTH/DEPTH PAINTED ADJUSTABLE SHELF IN COMPARTMENTS D1, D3, R1, P1, AND P3
5. ALUMINUM PEGBOARD WITH TRACKS ON THE REAR WALL OF COMPARTMENTS D2 & P2

REV	DATE	BY	CH
1	19JAN16	TES	THS
0	12NOV15	TES	KBO

CHASSIS DATA
MAKE: PIERCE
MODEL: IMPEL FR

Pierce MANUFACTURING INC.

TITLE: 1500-D-770, 750G WATER W/20G FOAM 161"BODY, FH FDLER (3) XLAYS, LADDERS NEXT TO TANK, DELUGE

FOR: PIERCE FIELD UNIT
APPLETON, WISCONSIN

DWG NO. 29527AD

JOB NO.	29527
SCALE 1:24	DATE
DRAWN BY TES	30OCT15
CHECKED BY CDU	30OCT15
SHEET SIZE D	SHEET NO. 1 OF 1

View File Created 20-JAN-2016 07:33:06