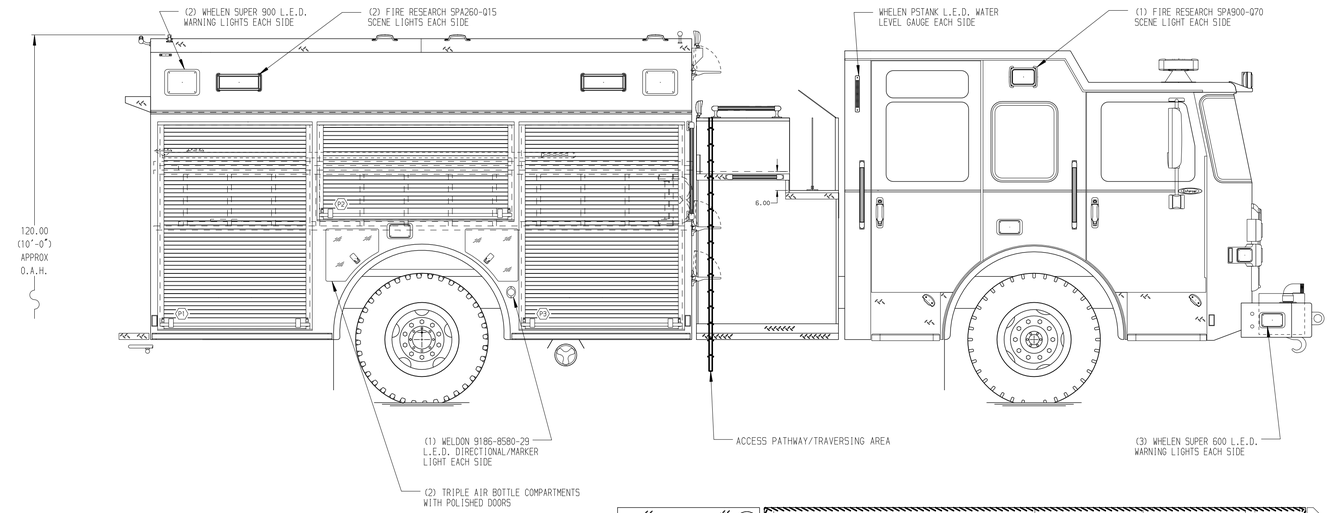

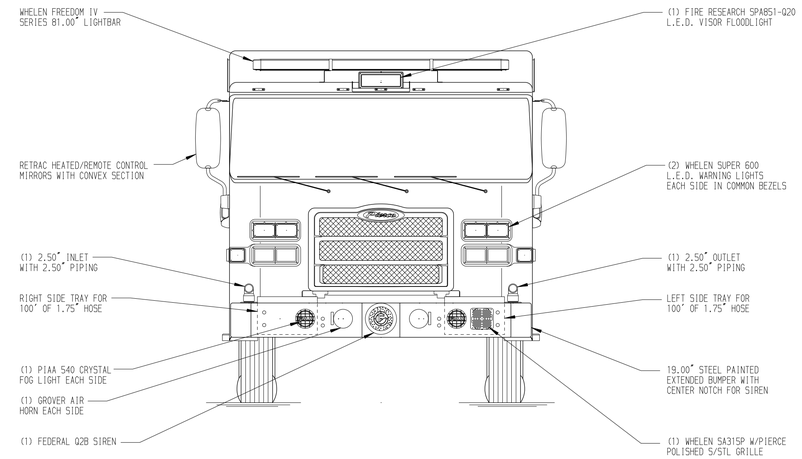

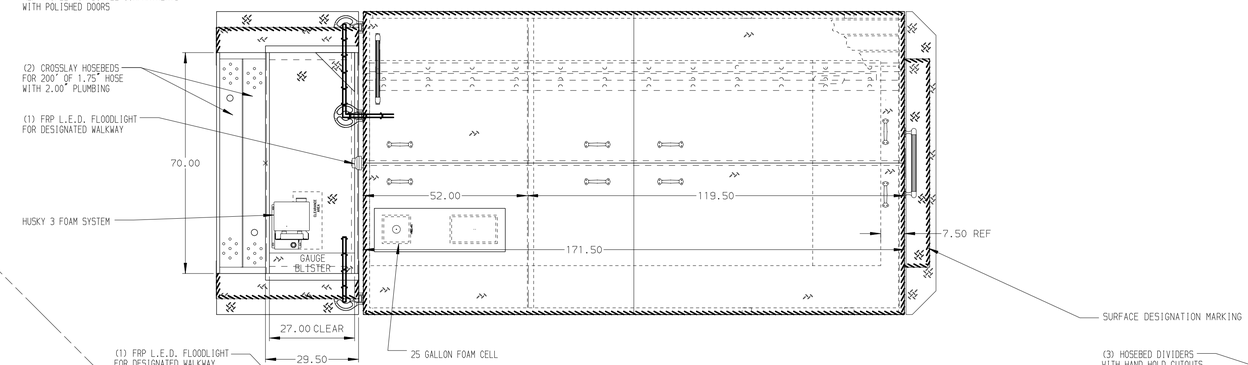

HOSEBED CAPACITIES
1 - 500' OF 2.50" HOSE
2 - 250' OF 2.50" HOSE
3 - 250' OF 2.50" HOSE
4 - 200' OF 2.50" HOSE

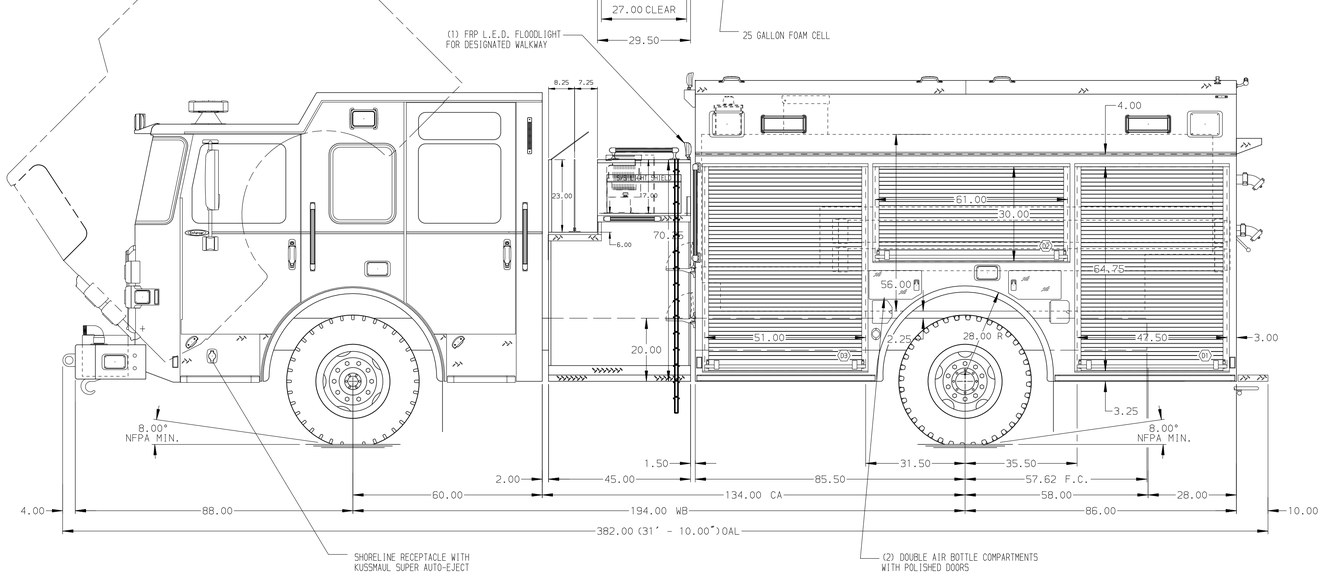

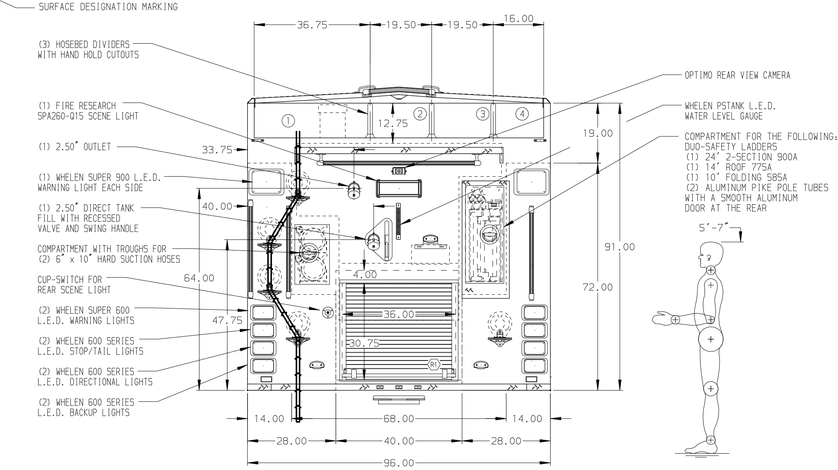

ALUMINUM BODY | MAXIMUM O.A.L. 382.00" | MAXIMUM O.A.H. 120.00" | SIDE ROLL PROTECTION

NOTE

DIMENSIONS SHOWN ARE APPROXIMATE AND ARE SUBJECT TO MINOR DEVIATIONS AS MAY OCCUR OR BE NECESSARY IN CONSTRUCTION.
MINOR DETAILS NOT SHOWN.

1. MOUNTING BRACKETS FOR ZIAMATIC AC-44 WHEEL CHOCKS LOCATED IN BODY COMPARTMENT xxxTBDxxx
2. BATTERY CHARGER LOCATED BEHIND DRIVER'S SEAT
3. BATTERY CHARGE INDICATOR LOCATED ON DRIVER'S SEAT RISER
4. ONE ADJUSTABLE FULL WIDTH/DEPTH SHELF IN COMPARTMENT D1, D3, P1 & P3
5. ONE FLOOR MOUNTED SLIDE-OUT TRAY IN COMPARTMENT P3 & R1
6. SWING-OUT TOOL BOARD WITH PEGBOARD PATTERN IN COMPARTMENT P2
7. VERTICAL PARTITION HOSE STORAGE SLOTS IN COMPARTMENT D3
8. HORIZONTAL EQUIPMENT MOUNTING TRACKS IN COMPARTMENT D2

REV	DATE	BY	CH
B	06MAR17	AMI	GHO
A	09FEB17	AMI	GHO

CHASSIS DATA
MAKE: PIERCE
MODEL: ENFORCER

Pierce MANUFACTURING INC.

TITLE: 1500-D-1500P W/25G FOAM CELL, 171" FHF&R FDLER BODY (2)XLAYS, HUSKY 3, HSH COMPT, T-BAR HOSEBED COVER
FOR: FLOYD COUNTY FLOYD, VIRGINIA
DWG NO.: 30843AD

JOB NO.	30843
SCALE	1:24
DATE	
DRAWN BY	AMI 14DEC16
CHECKED BY	KBO 15DEC16
SHEET SIZE	D
SHEET NO.	1 OF 1

View File Created 06-MAR-2017 08:22:20