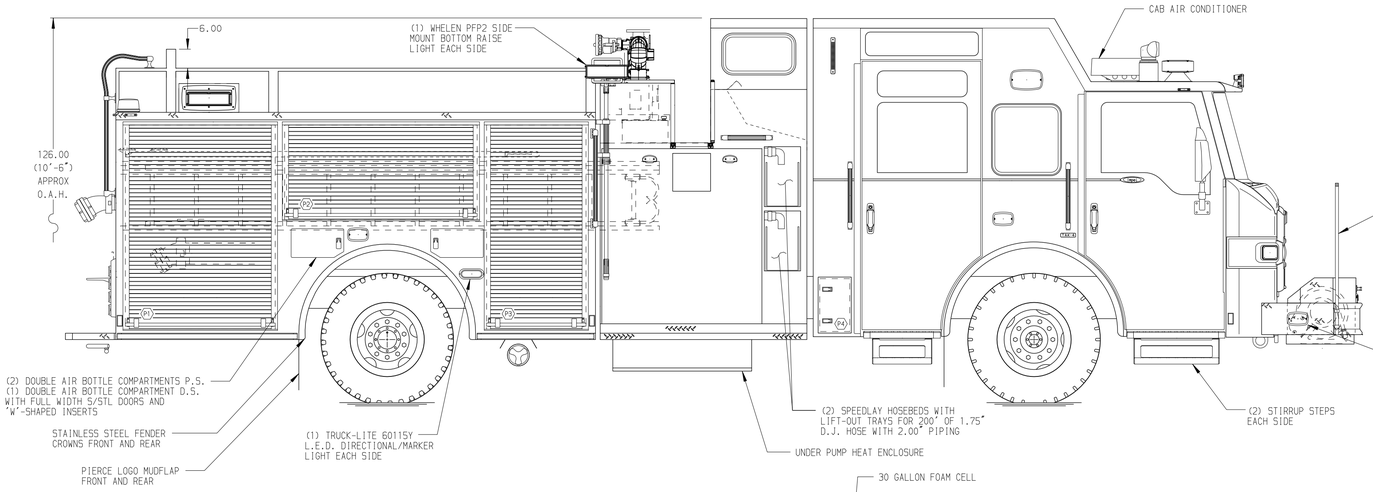

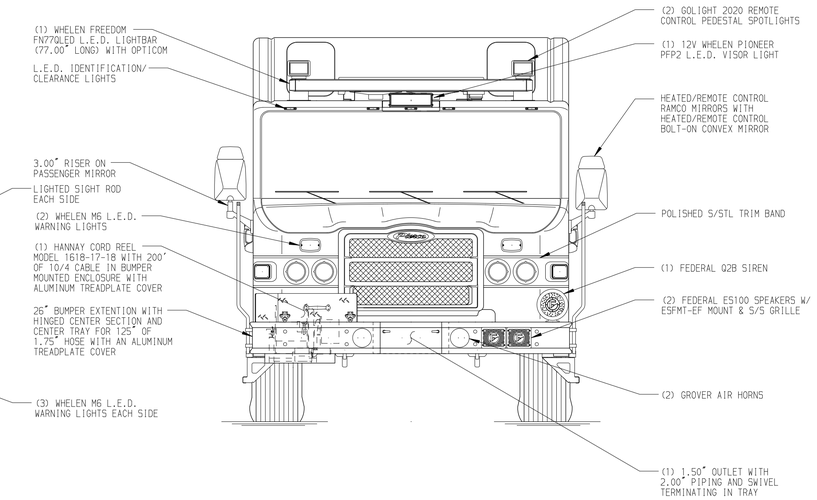

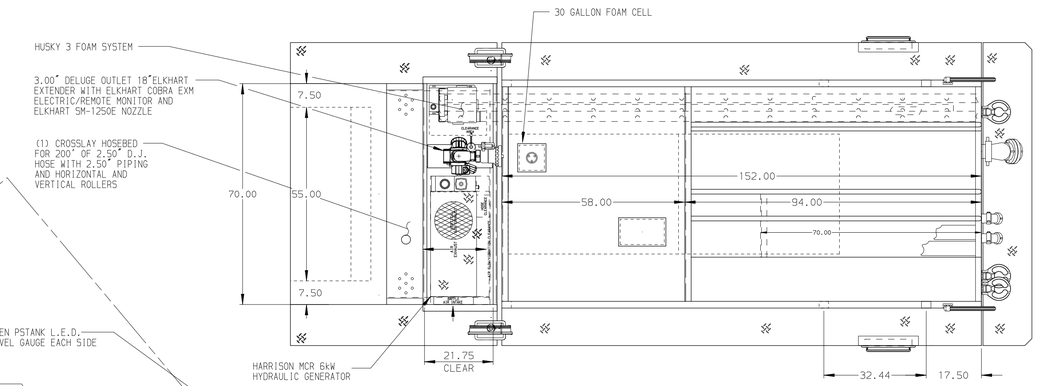

HOSEBED CAPACITIES
1 - 550' OF 3.00" HOSE
2 - OPEN
3 - 700' OF 5.00" HOSE
4 - 250' OF 1.75" HOSE

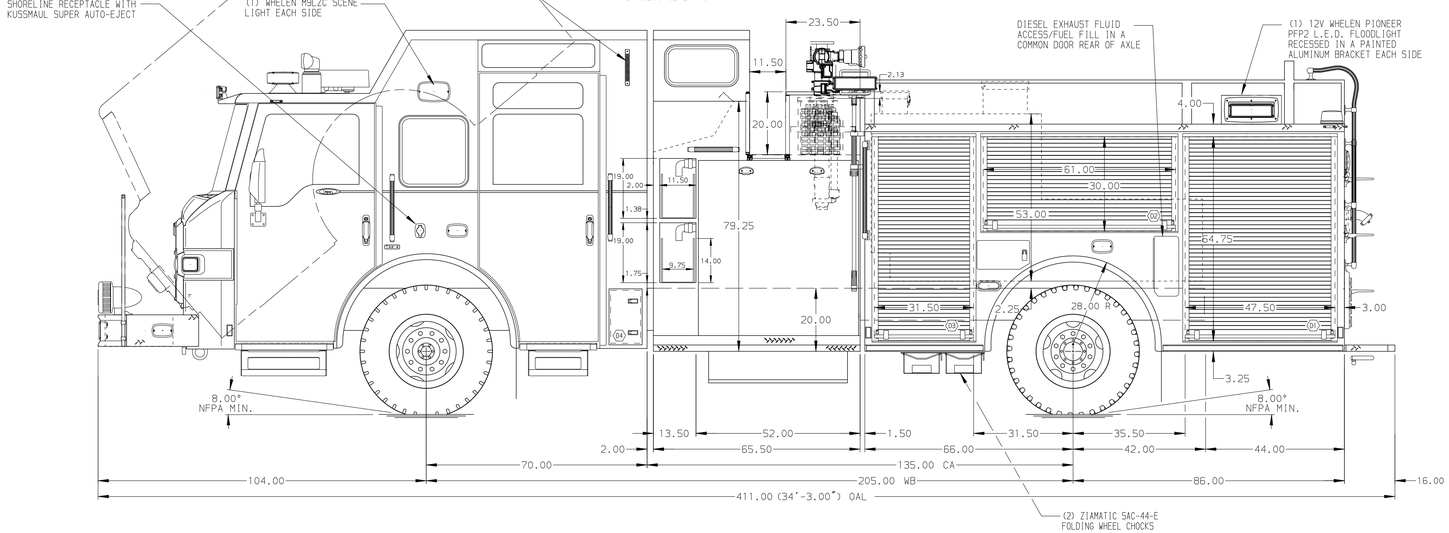

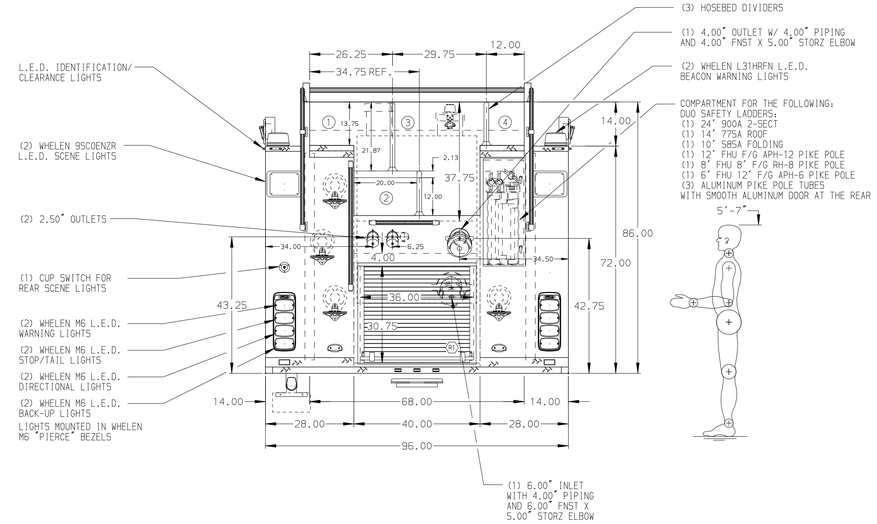

ALUMINUM BODY

FRONTAL IMPACT PROTECTION

NOTE

DIMENSIONS SHOWN ARE APPROXIMATE AND ARE SUBJECT TO MINOR DEVIATIONS AS MAY OCCUR OR BE NECESSARY IN CONSTRUCTION.
MINOR DETAILS NOT SHOWN.

1. MOUNTING BASES FOR ANTENNAS LOCATED PER SHOP ORDER
2. BATTERY CHARGER LOCATED IN COMPARTMENT D3
3. BATTERY CHARGE INDICATOR LOCATED ON D.S. SEAT RISER WITH BRACKET
4. ALUMINUM TREADPLATE EXTERIOR REAR WALL OF CAB
5. PERIMETER SCENE LIGHTS LOCATED PER SHOP ORDER
6. PIERCE L.E.D. COMPARTMENT DUAL LIGHT STRIPS LOCATED PER SHOP ORDER
7. ONE FULL WIDTH/DEPTH PAINTED ADJUSTABLE SHELF IN COMPARTMENTS D1 & P1; TWO IN P2 & P3
8. ONE FLOOR MOUNTED SLIDE-OUT TRAY IN COMPARTMENTS D1, P1, P3 & R1
9. PIERCE BLACK POLYUREA COATING ON TOP OF BUMPER FLANGE
10. ONE ADJUSTABLE 215# TILTING SLIDE-OUT TRAY IN COMPARTMENT D2
11. THREE SLIDE-OUT TOOL BOARDS IN COMPARTMENT D3
12. TURTLE TILE MATTING WITH RAMP ON FLOOR IN COMPARTMENT D2 & P2
13. PARTITION BETWEEN COMPARTMENTS D1/R1 AND P1/R1
14. MOUNTING RACK FOR (3) AIR BOTTLES LOCATED IN COMPARTMENT P3
15. TURTLE TILE MATTING ON ALL SHELVES AND TRAYS
16. CIRCUIT BREAKER PANEL AND SUB-FEED BOX LOCATED IN COMPARTMENT D3
17. ALL FOLDING STEPS TO BE TRIDENT WITH INTEGRATED L.E.D. LIGHT UNLESS SPECIFIED
18. THREE 15A 6-PLACE 120V RECEPTACLE STRIPS LOCATED IN CAB
19. SINGLE HAND OPERATION CABLE FOR TRAY IN COMPARTMENT D2
20. (2) ADDITIONAL POLY TRAYS SHIPPED LOOSE
21. S/STEEL SCUFFPLATES ON CAB DOOR JAMBS
22. DRIP PAN GUARD FOR ALL SIDE BODY ROLL-UP DOORS
23. PAINTED SHELF TRACKS LOCATED IN ALL SIDE BODY COMPARTMENTS

REV	DATE	BY	CH
7	16SEP15	DDO	JBO
6	01APR15	DDO	JBO
5	09MAR15	DDO	SHA

CHASSIS DATA
MAKE: PIERCE
MODEL: IMPEL FR

Pierce MANUFACTURING INC.

TITLE: 1500-D-530P 500G. WATER W/30G. FOAM CELL,152" RESCUE ENCL'D TOP MOUNT, LADDERS PS IN COMPT, DELUGE, A/C
FOR: GOLDEN VALLEY FIRE DEPARTMENT
GOLDEN VALLEY, MN
DWG NO.: 28646AD

JOB NO.	28646
SCALE	1:24
DATE	
DRAWN BY	DDO
	14FEB15
CHECKED BY	SHA
	20FEB15
SHEET SIZE	D
SHEET NO.	1 OF 1

View File Created 16-SEP-2015 15:14:05