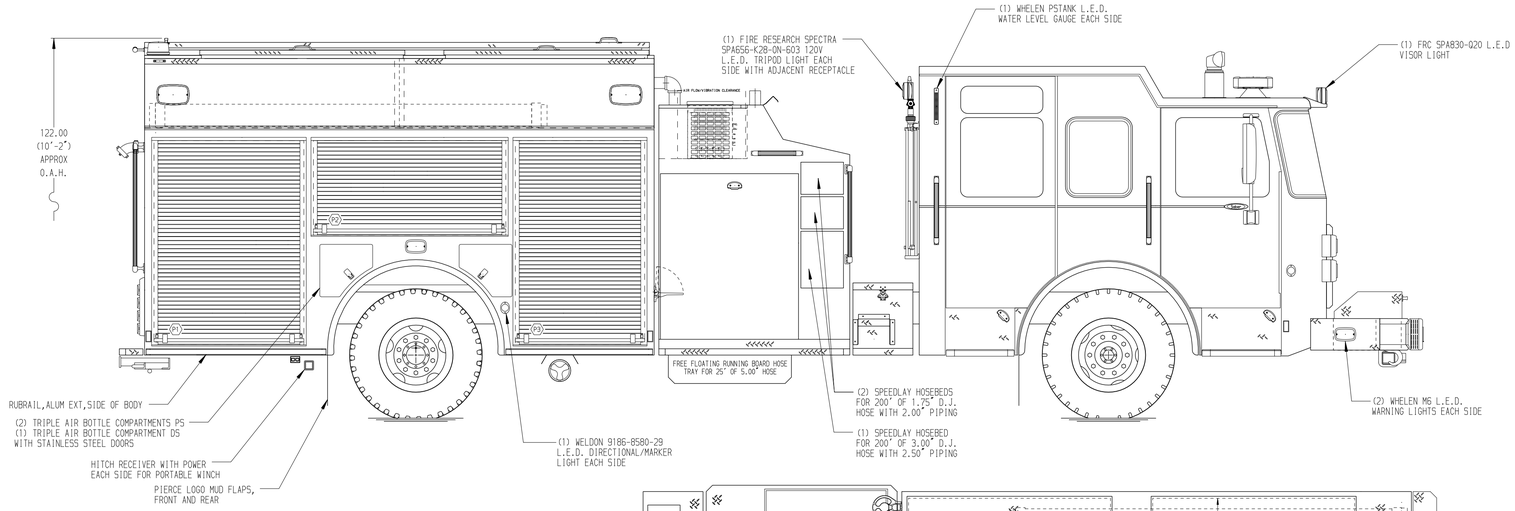

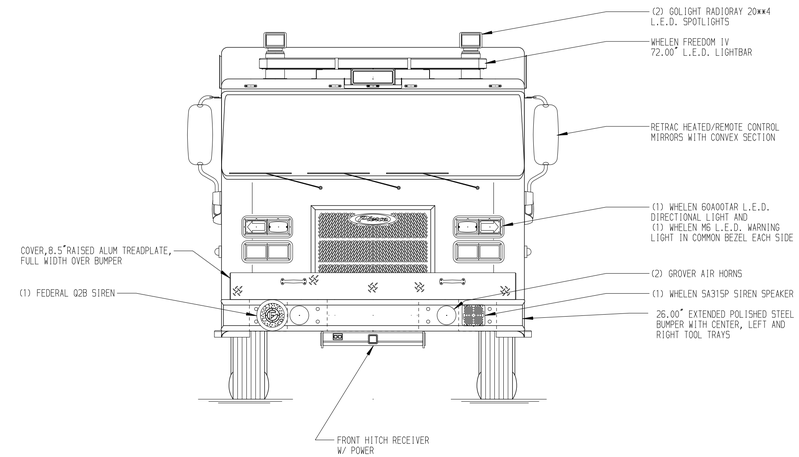

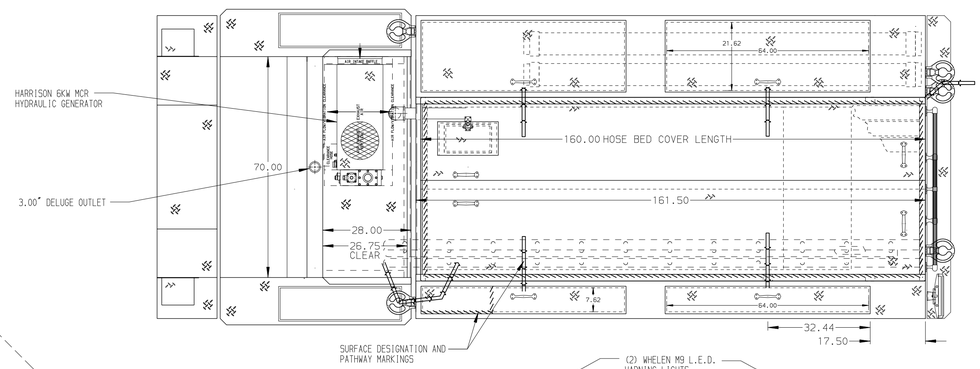

HOSEBED CAPACITIES
1. 1000' OF 5.00" D.J. POLY HOSE
2. 200' OF 3.00" D.J. POLY HOSE
3. 200' OF 3.00" D.J. POLY HOSE

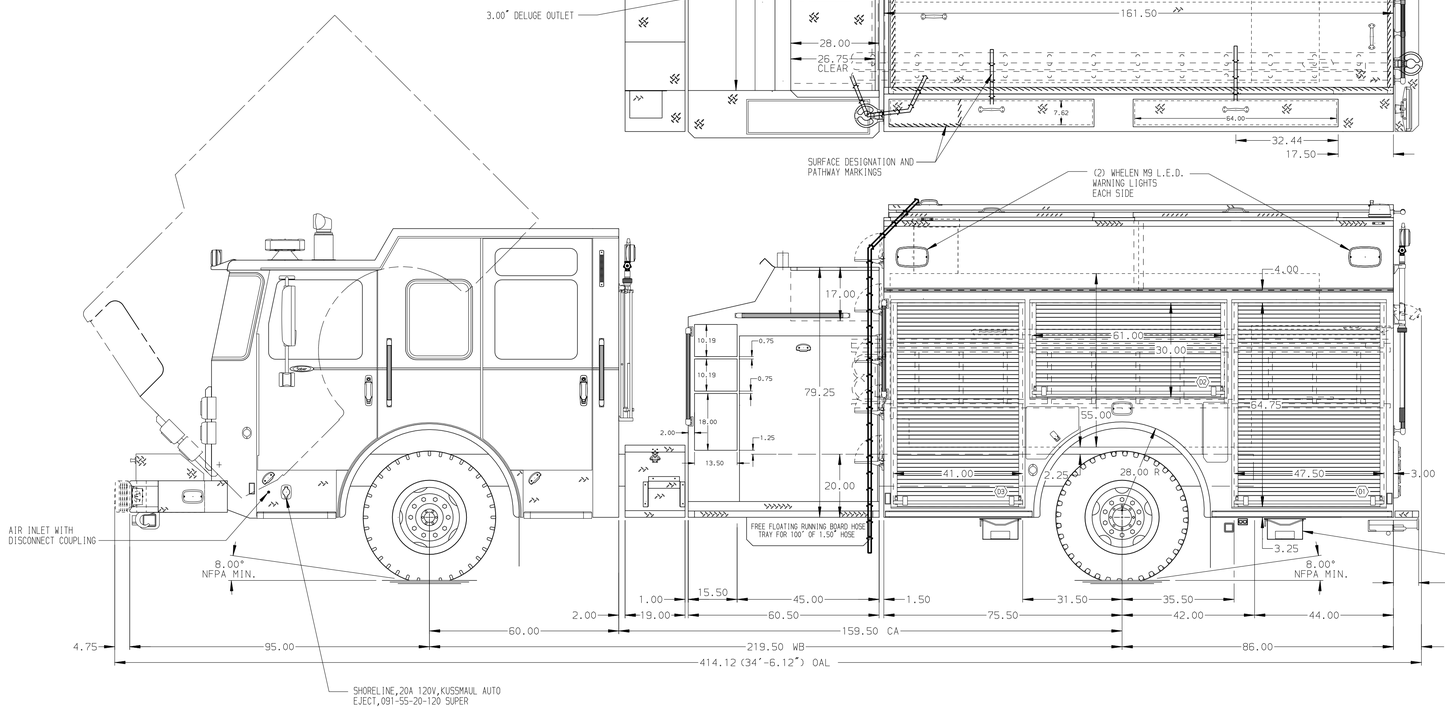

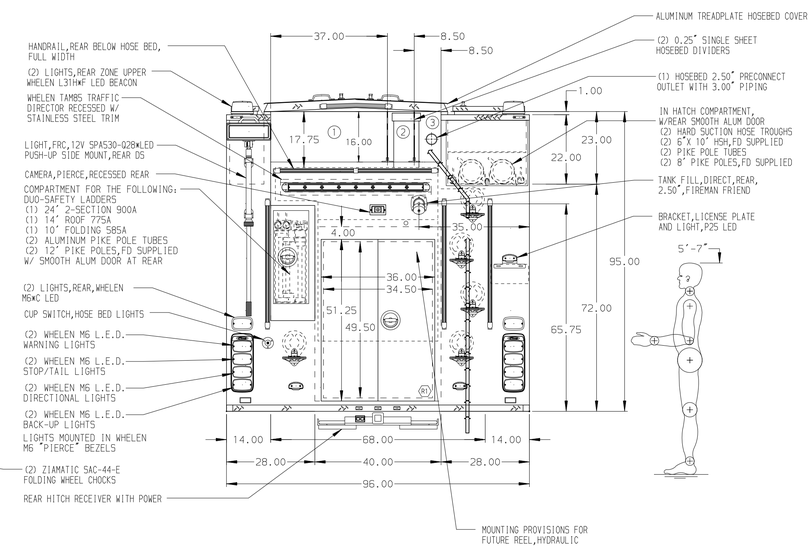

ALUMINUM BODY

SIDE ROLL AND FRONTAL IMPACT PROTECTION

NOTE
DIMENSIONS SHOWN ARE APPROXIMATE AND ARE SUBJECT TO MINOR DEVIATIONS AS MAY OCCUR OR BE NECESSARY IN CONSTRUCTION.
MINOR DETAILS NOT SHOWN.

REV	DATE	BY	CH
5	15MAR17	RWI	GSC
4	14FEB17	JLA	GSC

Pierce MANUFACTURING INC.

CHASSIS DATA	TITLE	1500-D-1000P,161",FULL HEIGHT,FDLER D.S. FULL DEPTH P.S.,(3) SPD-LAYS,DELUGE,GENERATOR	JOB NO. 30730
MAKE PIERCE	FOR	GRASSY POND FIRE DEPARTMENT GAFFNEY, SOUTH CAROLINA	SCALE 1:24 / DATE
MODEL SABER FR	DWG NO.	30730AD	DRAWN BY GVH 30NOV16
			CHECKED BY KBO 30NOV16
			SHEET SIZE D / SHEET NO. 1 OF 1

View File Created 17-MAR-2017 12:11:05