PASSENGER'S SIDE COMPARTMENTS CONTAIN THE FOLLOWING:

COMPARTMENT P1 CONTAINS:
- (2) HYDRAULIC REELS W/100' OF HOSE
- (1) STD DEPTH ADJ SHELF
- (1) STD DEPTH ADJ SLIDE OUT TRAY
- (1) STD DEPTH FLOOR MTD TRAY
- (1) 30A, 240V TL RECEPTACLE

COMPARTMENT P2 CONTAINS:
- (1) LOW PRESSURE AIR REEL W/200' OF HOSE
- (1) ELECTRIC CORD REEL WITH 200' OF 10/4 YELLOW CORD
- (1) STD DEPTH ADJ SLIDE OUT TILT TRAY

COMPARTMENT P3 CONTAINS:
- (1) VERTICLE COMPARTMENT DIVIDER
- (1) STD DEPTH FLOOR MTD SLIDE OUT TRAY WITH TOOLLBOARD

COMPARTMENT P4 CONTAINS:
- (2) STD DEPTH ADJ SHELVES

COMPARTMENT P5 CONTAINS:
- (2) STD DEPTH ADJ SHELVES

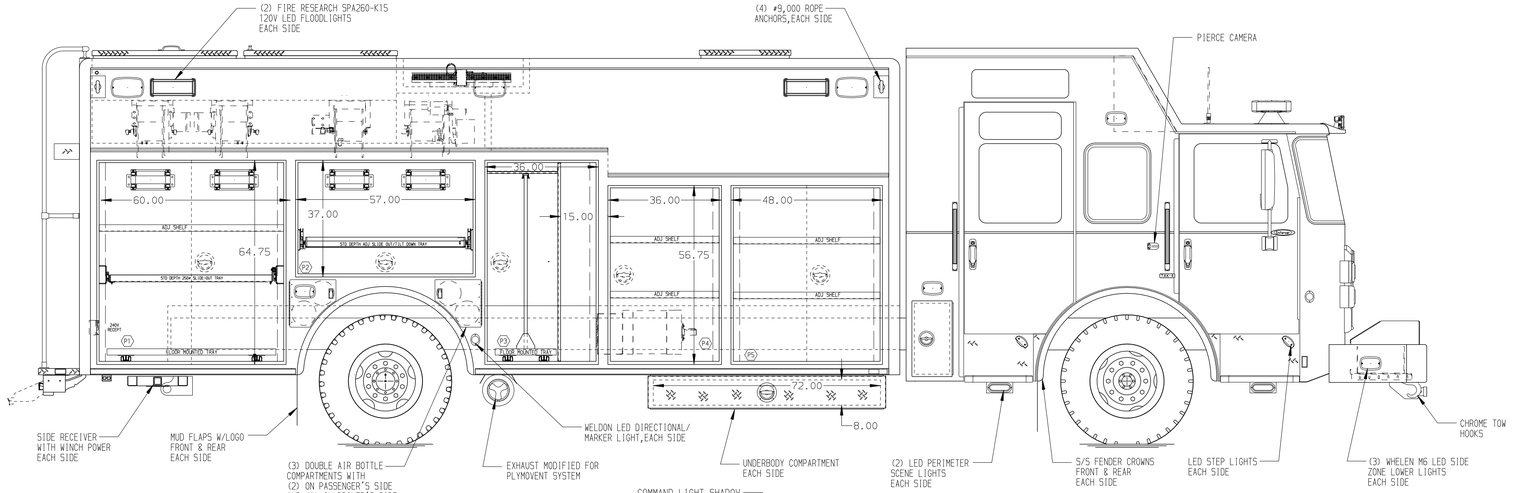

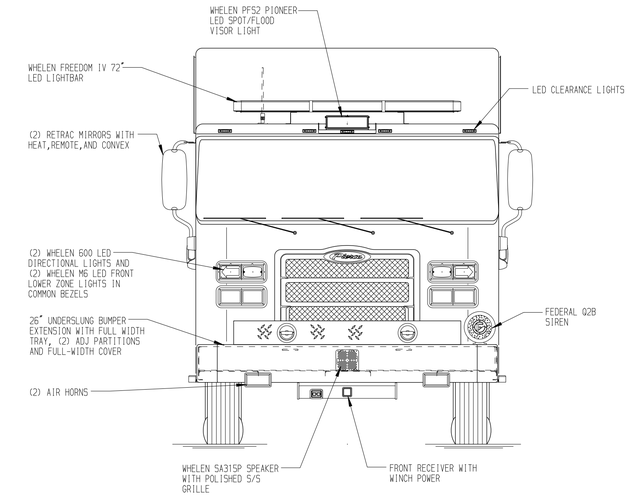

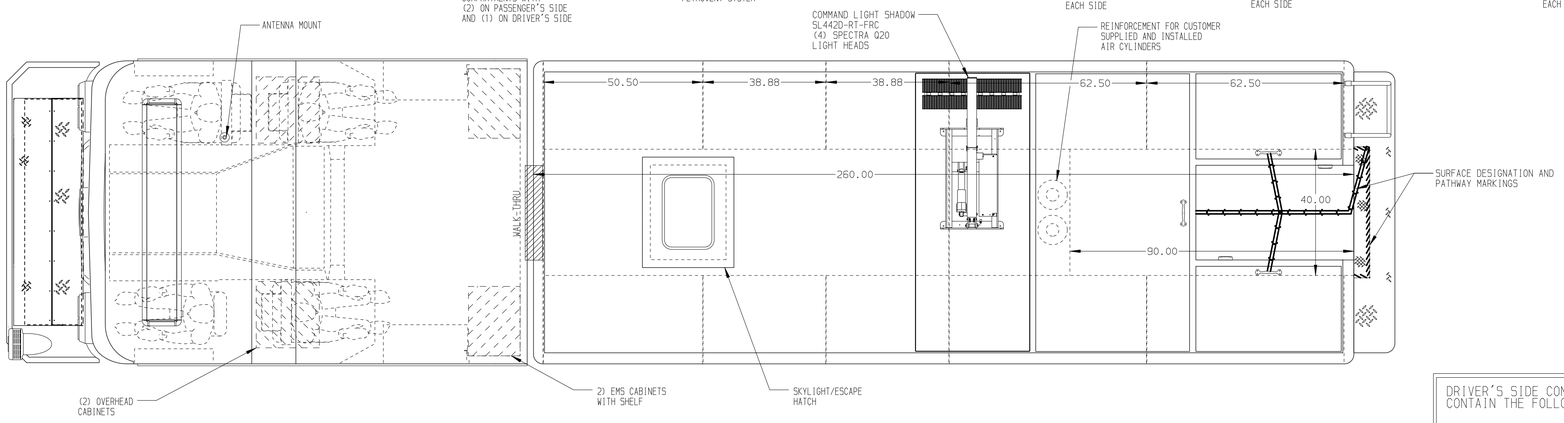

REAR COMPARTMENT CONTAINS THE FOLLOWING:

COMPARTMENT R1 CONTAINS:
- EQUIPMENT RACK FOR:
  (1) STOKES BASKET
  (2) LITTLE GIANT LADDERS
  (2) SPECIAL STORAGE TROUGHS
- (1) 84" DP FLOOR MTD SLIDE OUT TRAY
- (1) HORIZONTAL FLOOR EXTENSION

DRIVER'S SIDE COMPARTMENTS CONTAIN THE FOLLOWING:

COMPARTMENT D1 CONTAINS:
- (2) HYDRAULIC REELS W/100' OF HOSE
- (1) STD DEPTH ADJUSTABLE SHELF
- (1) STD DEPTH ADJ SLIDE OUT TRAY
- (1) STD DEPTH FLOOR MTD TRAY
- (1) 30A, 240V TL RECEPTACLE

COMPARTMENT D2 CONTAINS:
- (1) LOW PRESSURE AIR REEL W/200' OF HOSE
- (1) ELECTRIC CORD REEL WITH 200' OF 10/4 YELLOW CORD
- (1) STD DEPTH ADJ SHELF

COMPARTMENT D3 CONTAINS:
- (3) STD DEPTH ADJ SHELVES

COMPARTMENT D4 CONTAINS:
- (1) 20A,120V T.L. RECEPTACLE
- (1) AIR INLET/OUTLET WITH DISCONNECT FITTING
- (1) STD DEPTH ADJ SHELF
- CIRCUIT BREAKER PANEL
- GENERATOR METER PANEL
- COMMAND LIGHT CONTROLLER
- (1) STREAMLIGHT SURVIVOR LED HANDLIGHT

COMPARTMENT D5 CONTAINS:
- (1) KUSSMAUL 1200 CHARGER
- (2) STD DEPTH ADJ SHELVES
- CAB LIFT CONTROLLER

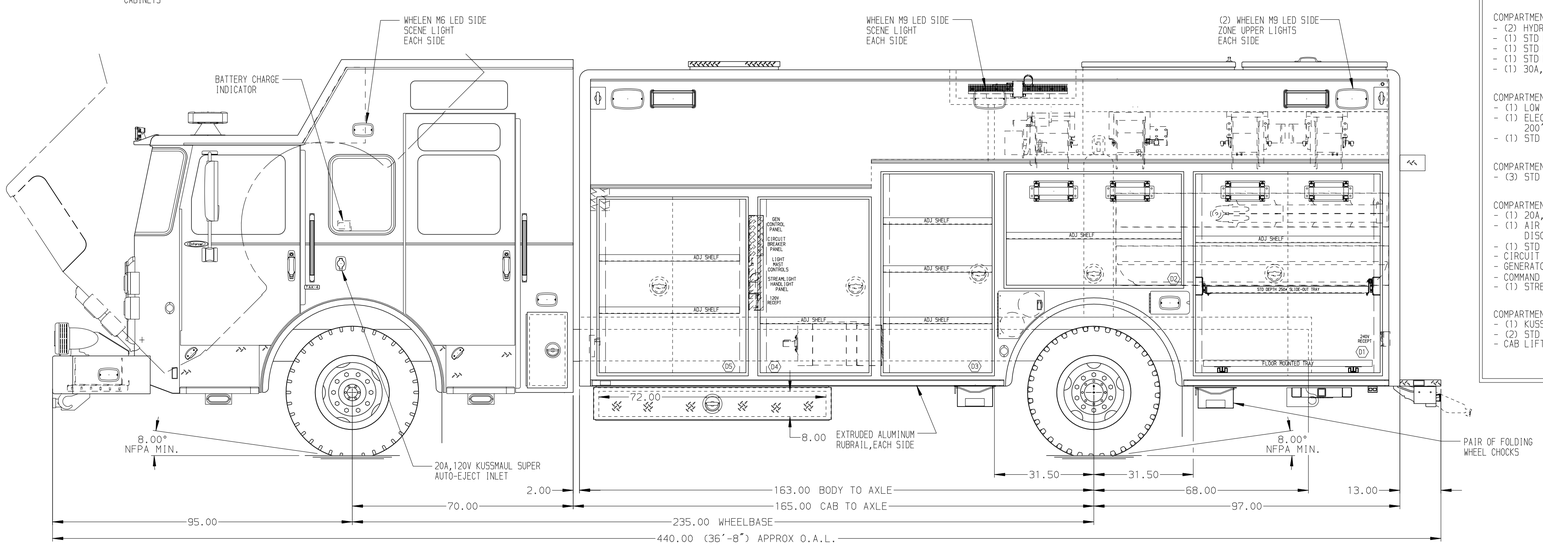

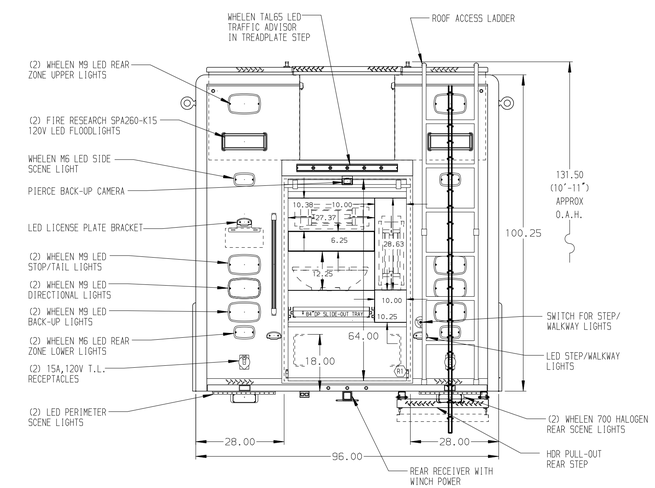

NOTE

DIMENSIONS SHOWN ARE APPROXIMATE AND ARE SUBJECT TO MINOR DEVIATIONS AS MAY OCCUR OR BE NECESSARY IN CONSTRUCTION.
MINOR DETAILS NOT SHOWN.

NOTES:
1. ONAN 40kW THREE PHASE PTO DRIVEN GENERATOR LOCATED BETWEEN THE FRAME RAILS
2. ONSPOT AUTOMATIC TIRE CHAINS
3. WARN #9,000 PORTABLE WINCH
4. POLISHED S/S SCUFFPLATES ON CAB DOOR JAMBS
5. FLOOR IN CAB AND CREW CAB TO BE PADDED RUBBER
6. (2) #9,000 RECEIVER STYLE TIE DOWNS
7. PIERCE DUAL LED LIGHT STRIPS IN EACH BODY AND HATCH COMPARTMENT

NOTE:
LAP DOORS HAVE BEEN SHOWN IN HIDDEN LINES TO CLEARLY IDENTIFY THE EQUIPMENT IN EACH COMPARTMENT. DASHED LINES ON SIDES ARE DOORS IN OPEN POSITION

CLEAR DOOR WIDTH KEY

AMDOR ROLL UP DOORS:	-2 1/4"
GORTITE ROLL UP DOORS:	-2 1/2"
PIERCE DOUBLE LAP DOORS:	-4 1/4"
PIERCE LIFT-UP LAP DOORS:	-1 1/2"

(EX: 60"F-F - 2 1/4"= 57 3/4" CLEAR)
(F-F)= FRAME TO FRAME

REV	DATE	BY	CH
7	170CT17	ALZ	AZU
6	18AUG17	ALZ	AZU
5	24JUL17	ALZ	AZU
4	31MAY17	DHE	AZU

CHASSIS DATA
MAKE: PIERCE
MODEL: EN7024

Pierce MANUFACTURING INC.

TITLE: HEAVY DUTY RESCUE WALKIN/NON-WALKIN COMBO
FOR: GREENSBORO FIRE DEPARTMENT GREENSBORO,NC
CARL WALKER
DWG NO. 31217AD-SH1

JOB NO.	31217
SCALE	1:24
DATE	03MAY17
DRAWN BY	DHE
CHECKED BY	CDK
CHECKED BY	10MAY17
SHEET SIZE	D
SHEET NO.	1 OF 1

View File Created 18-OCT-2017 07:36:44