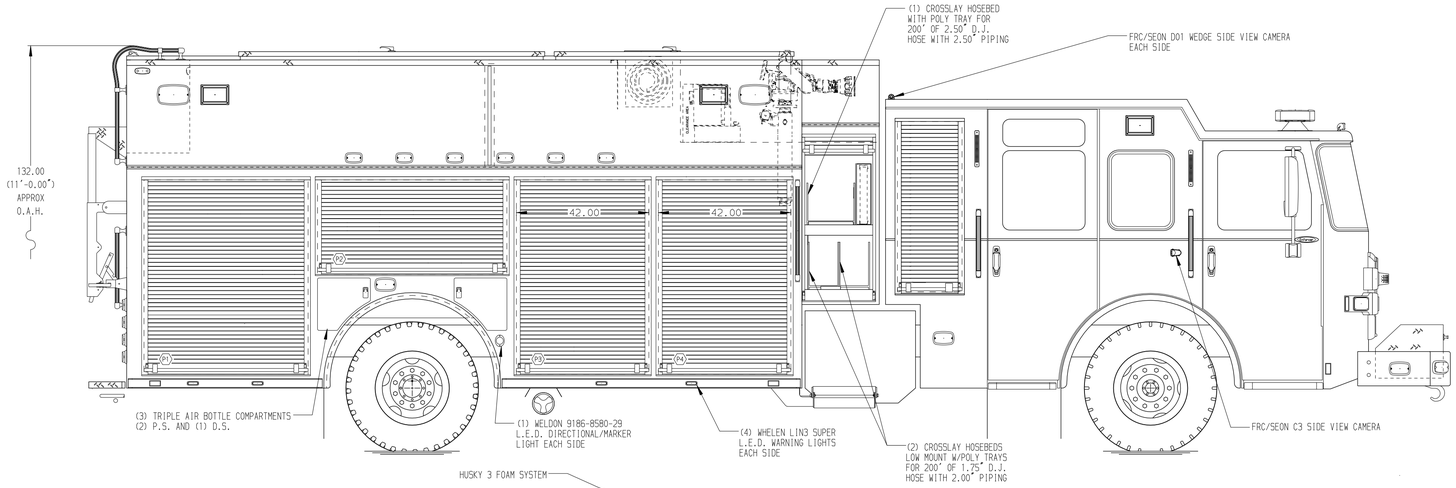

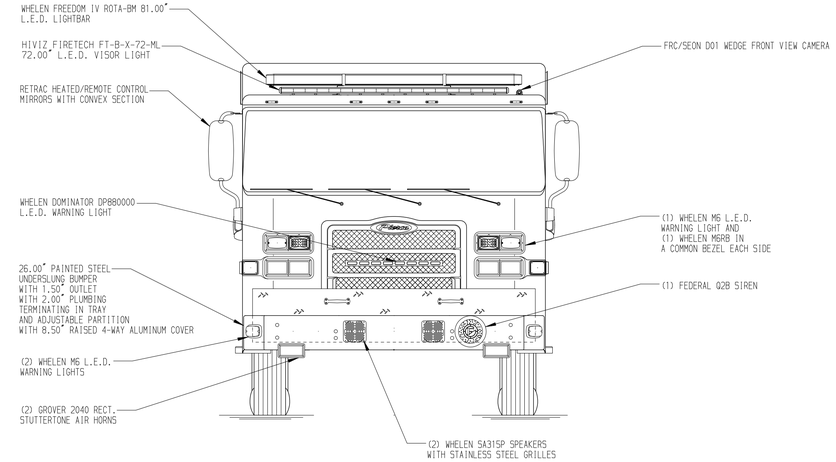

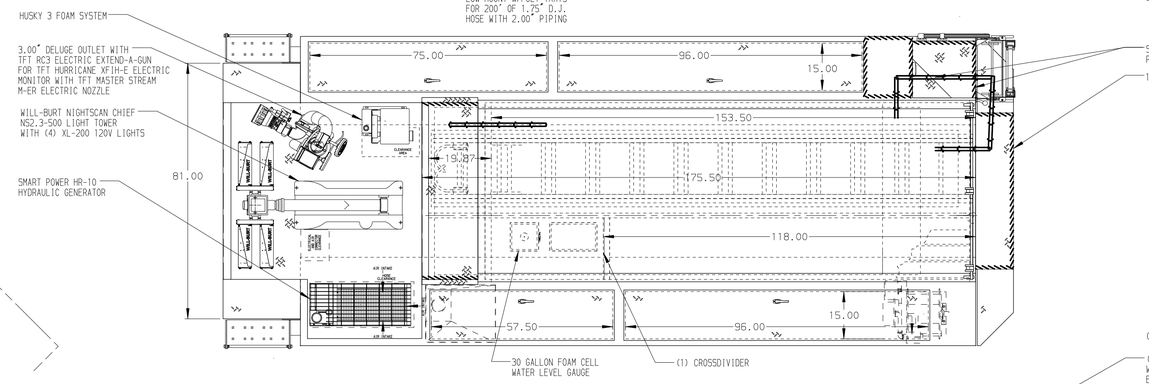

HOSEBED CAPACITIES

1. 200' OF 2.50" D.J. POLY HOSE
2. 200' OF 2.50" D.J. POLY HOSE
3. 900' OF 5.00" D.J. POLY HOSE

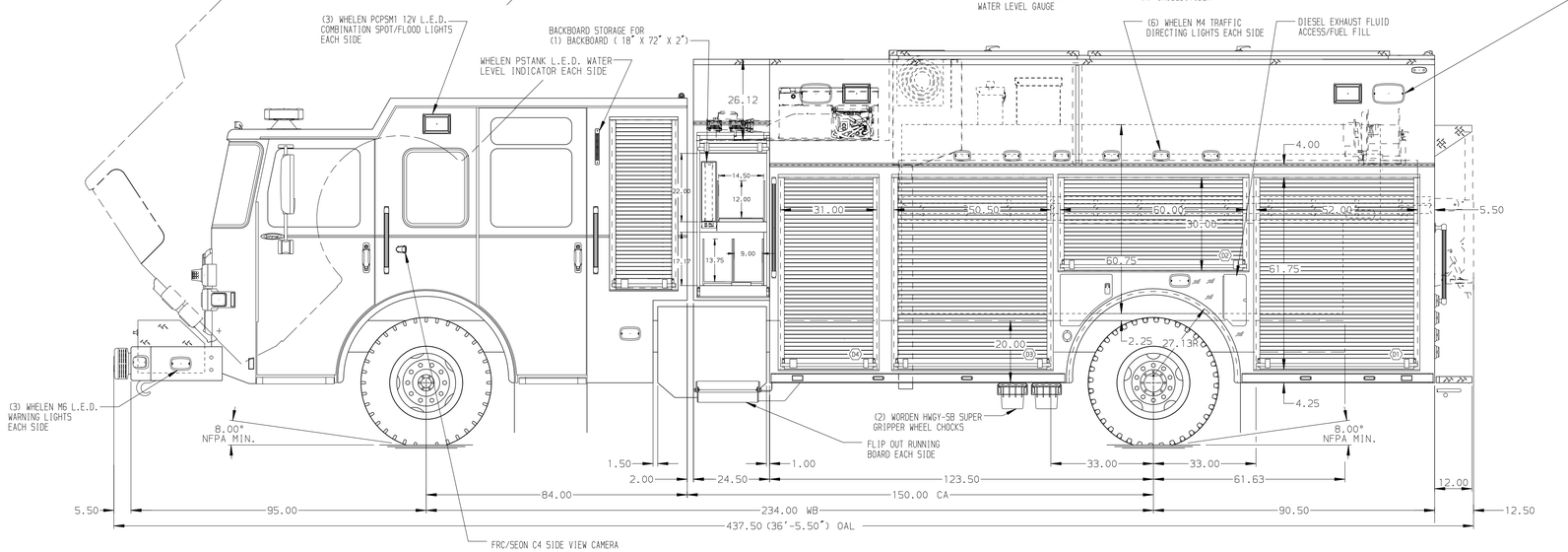

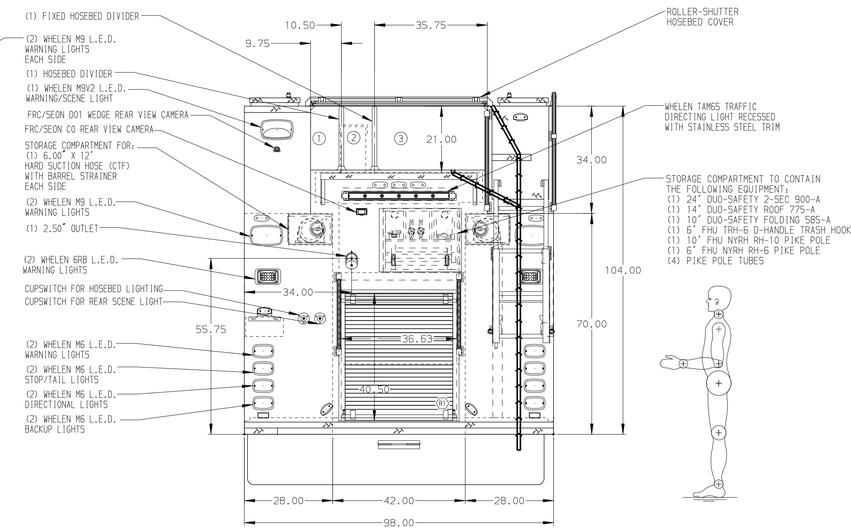

ALUMINUM BODY

NOTE

DIMENSIONS SHOWN ARE APPROXIMATE AND ARE SUBJECT TO MINOR DEVIATIONS AS MAY OCCUR OR BE NECESSARY IN CONSTRUCTION.
MINOR DETAILS NOT SHOWN.

1. AIR INLET WITH DISCONNECT COUPLING IN D.S. STEP WELL
2. 120V NEMA TWIST LOCK SHORELINE RECEPTACLE IN D.S. STEP WELL
3. BATTERY CHARGER LOCATED BEHIND DRIVER SEAT
4. BATTERY CHARGER INDICATOR LOCATED ON DRIVER'S SEAT RISER
5. OIL DRY HOPPER IN HATCH ABOVE COMPARTMENT 7
6. DUAL L.E.D. LIGHT STRIPS LOCATED IN HOSE BED
7. S/STL SCUFFPLATE ON ALL SIDES OF CROSSLAY OPENINGS
8. ONE 120V NEMA DUPLEX RECEPTACLES IN THE FORWARD FACING EMS CABINET AND BEHIND THE DRIVER'S SEAT

REV	DATE	BY	CH
D	14FEB18	LST	COR
C	29JAN18	LST	COR
B	20DEC17	LST	COR
A	06OCT17	CCA	CDU

CHASSIS DATA
MAKE: PIERCE
MODEL: ENFORCER

Pierce MANUFACTURING INC.

TITLE: 1500-D-1030P 1000 GAL OF WATER W/ 30 GAL FOAM CELL 214" PUC RESCUE, (3) X-LAYS, LADDERS THRU TANK
FOR: HIGHLAND TOWNSHIP FIRE DEPARTMENT HIGHLAND, MICHIGAN
DWG NO.: 31665AD-SH1

JOB NO.	31665
SCALE 1:24	DATE
DRAWN BY LST	28SEP17
CHECKED BY CCA	28SEP17
SHEET SIZE D	SHEET NO. 1 OF 2

View File Created 19-FEB-2018 09:11:19