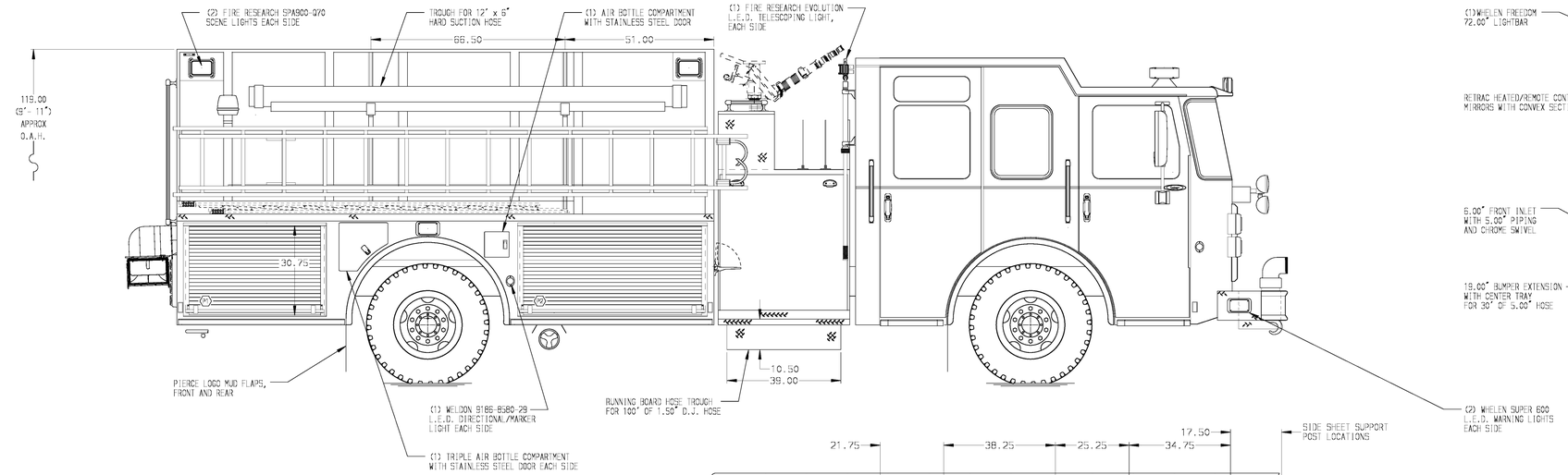

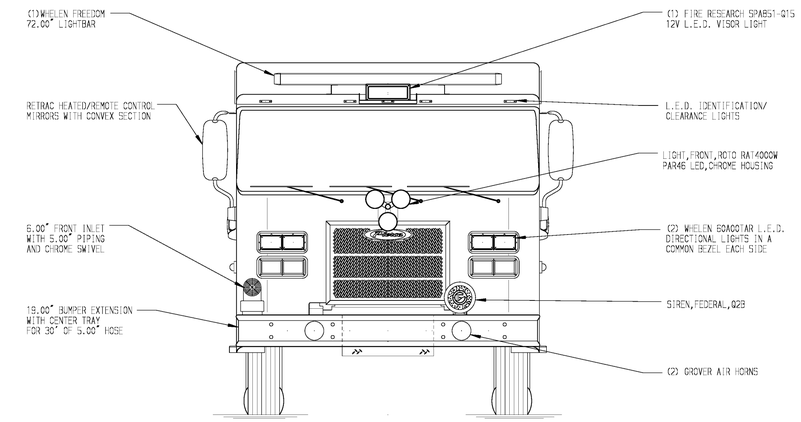

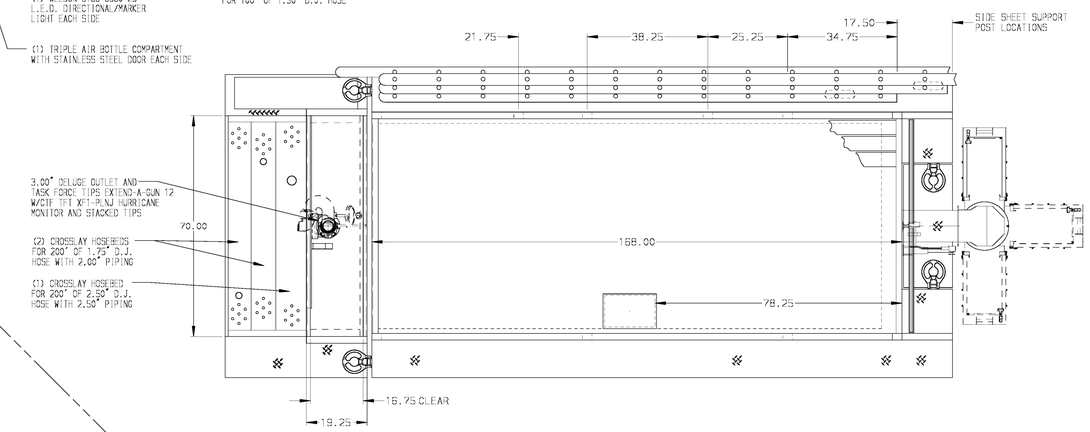

HOSEBED CAPACITIES

1. 500' OF 2.50" D.J. POLY HOSE
2. 1000' OF 4.00" D.J. POLY HOSE

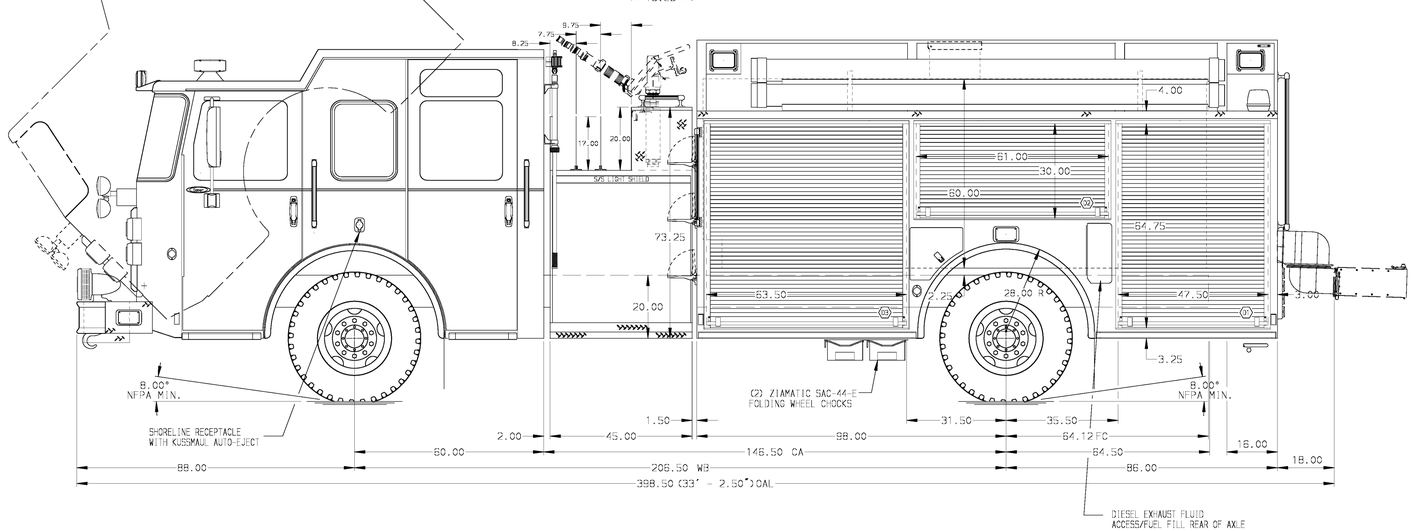

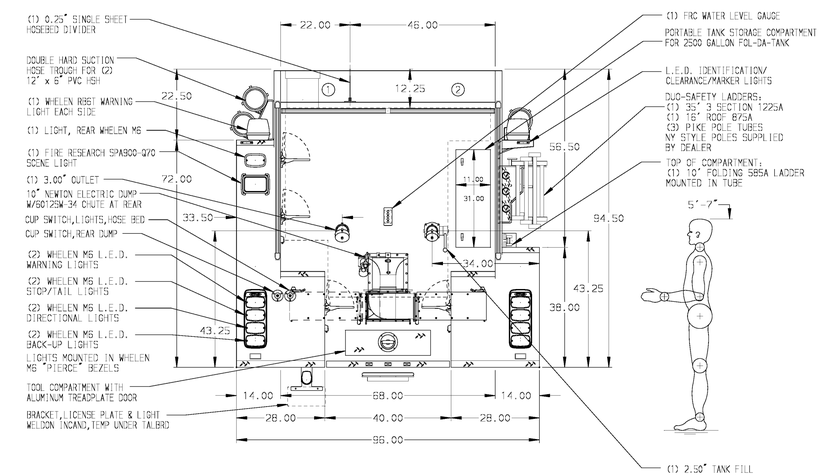

ALUMINUM BODY

NOTE

DIMENSIONS SHOWN ARE APPROXIMATE AND ARE SUBJECT TO MINOR DEVIATIONS AS MAY OCCUR OR BE NECESSARY IN CONSTRUCTION.
MINOR DETAILS NOT SHOWN.

REV	DATE	BY	CH
V	24NOV15	JLA	GSC
V	12OCT15	JLA	GSC
V	08SEP15	AMI	WKL

CHASSIS DATA
MAKE: PIERCE
MODEL: SABER FR

Pierce MANUFACTURING INC.

TITLE: 1500-D-1800P 184"PUMPER TANKER, (3)XLAYS, DELUGE, NEWTON REAR DUMP, LADDERS ON PS SIDE SHEET

FOR: HOLLAND FIRE DISTRICT NO. 1, HOLLAND, NEW YORK

DWG NO.: 29326AD

JOB NO.	29326
SCALE 1:24	DATE
DRAWN BY AMI	14AUG15
CHECKED BY WKL	14AUG15
SHEET SIZE D	SHEET NO. 1 OF 1

View File Created 24-NOV-2015 15:09:19