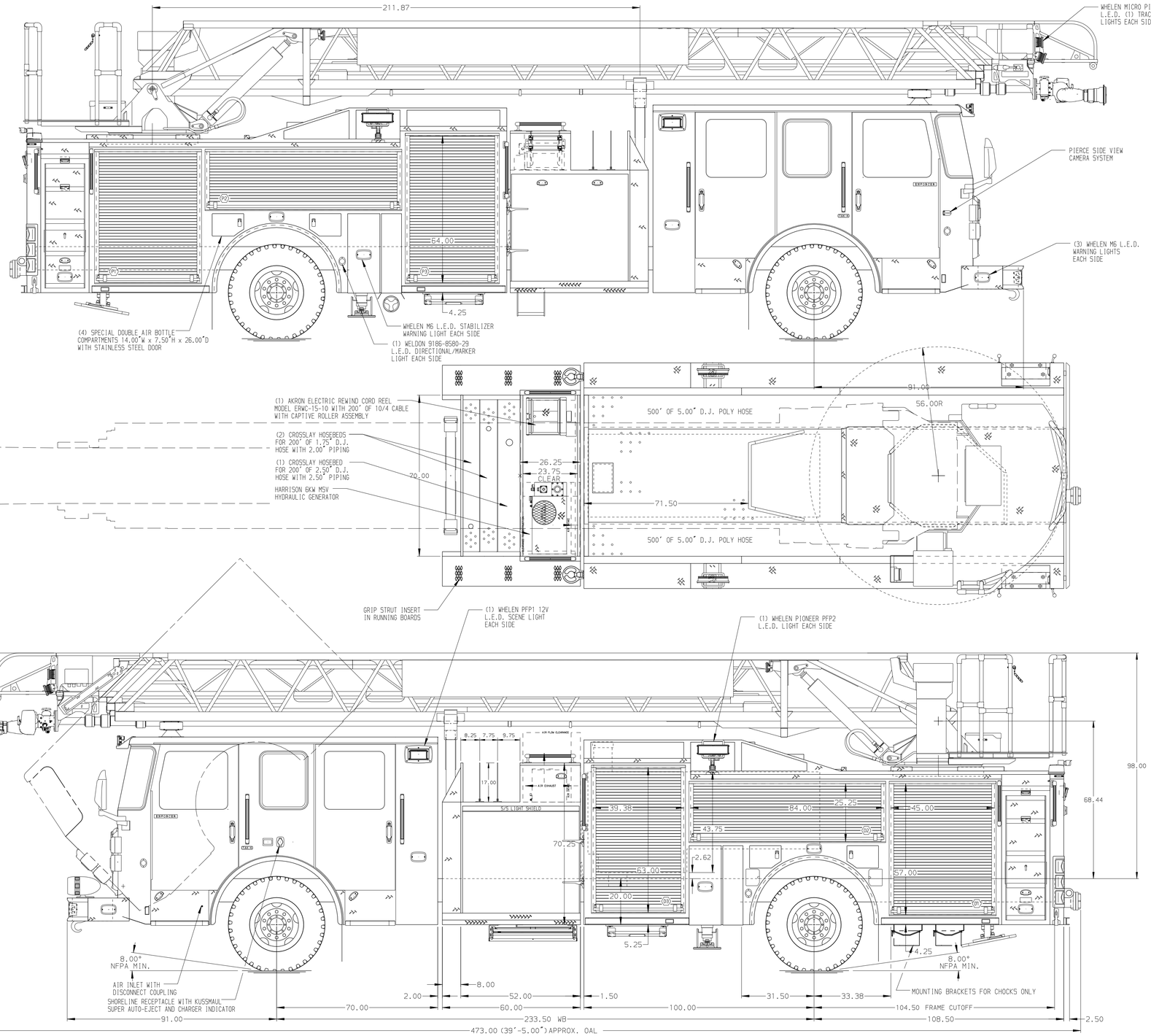

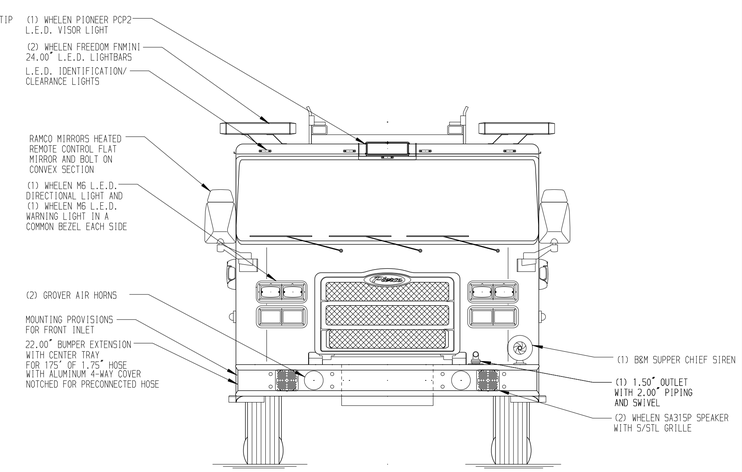

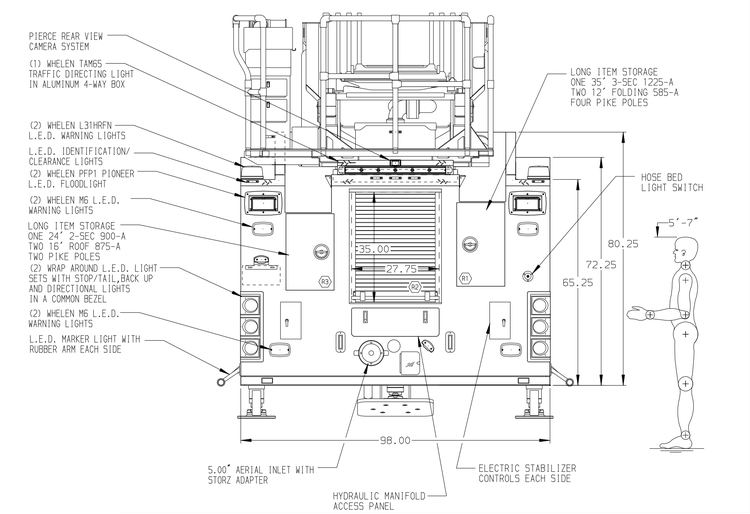

ALUMINUM BODY

FRONTAL IMPACT AND SIDE ROLL PROTECTION

NOTE

DIMENSIONS SHOWN ARE APPROXIMATE AND ARE SUBJECT TO MINOR DEVIATIONS AS MAY OCCUR OR BE NECESSARY IN CONSTRUCTION.
MINOR DETAILS NOT SHOWN.

1. INSTA-CHAIN AUTOMATIC TIRE CHAINS TO BE PROVIDED AT REAR
2. BATTERY CHARGER LOCATED BEHIND DRIVER SEAT
3. AIR OUTLET WITH SHUT OFF VALVE ON DRIVER'S PUMP PANNEL
4. ONE ADJUSTABLE FULL WIDTH/FULL DEPTH SHELF IN COMPARTMENTS D2,P2 (2) IN D1,D3,P1,P3
5. ONE FLOOR MOUNTED SLIDE-OUT TRAY IN COMPARTMENTS D1,D3,P1,P3
6. CIRCUIT BREAKER PANEL IN COMPARTMENT D3
7. TRIDENT FOLDING STEPS MOUNTED ON AERIAL DEVICE PER SHOP ORDER
8. L.E.D. LIGHTING ON AERIAL LADDER SECTIONS
9. 120V DUPLEX RECEPTACLE AT THE AERIAL TIP
10. 2-WAY INTERCOM SYSTEM BETWEEN AERIAL TIP AND TURNTABLE
11. LIFTING EYE RESCUE ATTACHMENT AT AERIAL TIP
12. 1500 GPM HIGH FLOW WATERWAY
13. REMOTE MONITOR CONTROLS AT PUMP PANEL
14. LITTLE GIANT LADDER MODEL 13 ON SHELF IN COMPARTMENT D1
15. PROVISION FOR FRONT INLET

REV	DATE	BY	CH
1	22DEC15	RPA	THS
2	20OCT15	RPA	THS
3	02SEP15	RPA	JBL

CHASSIS DATA
MAKE: PIERCE
MODEL: ENFORCER

Pierce MANUFACTURING INC.

TITLE: 107' ASCENDANT HSL AERIAL LADDER AND BODY ASSEMBLY
500 GALLON WATER TANK

FOR: CITY OF HUNTSVILLE
HUNTSVILLE AL

DWG NO. 29455AD

JOB NO.	29455
SCALE	1:24
DATE	
DRAWN BY	RPA 17SEP15
CHECKED BY	JBL 18SEP15
SHEET SIZE	D
SHEET NO.	1 OF 1

View File Created 22-DEC-2015 11:17:03