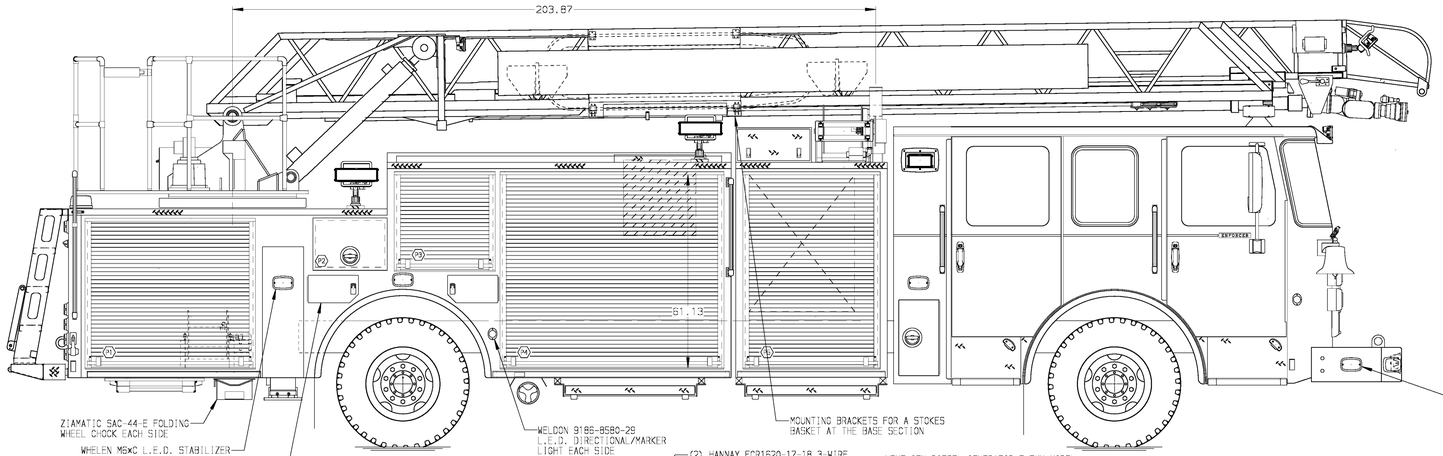

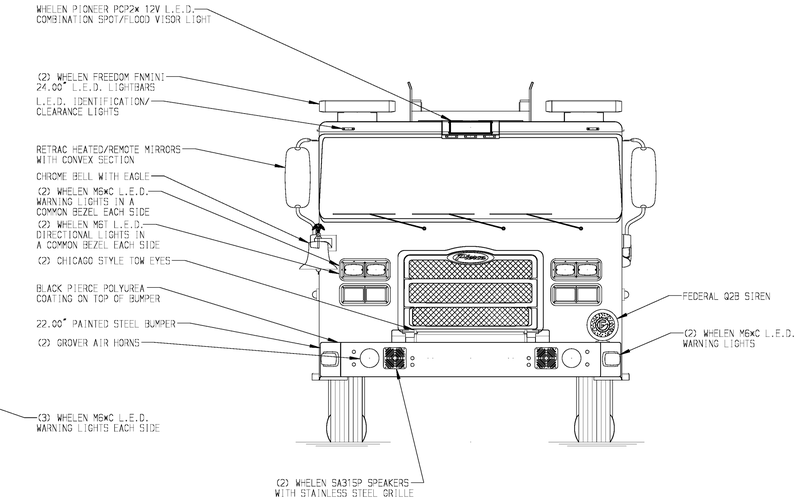

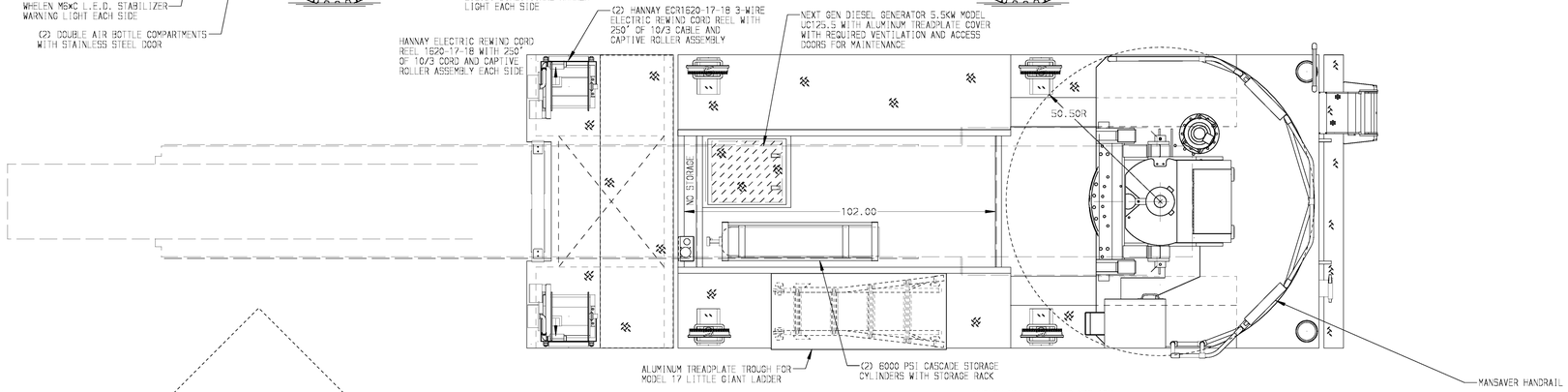

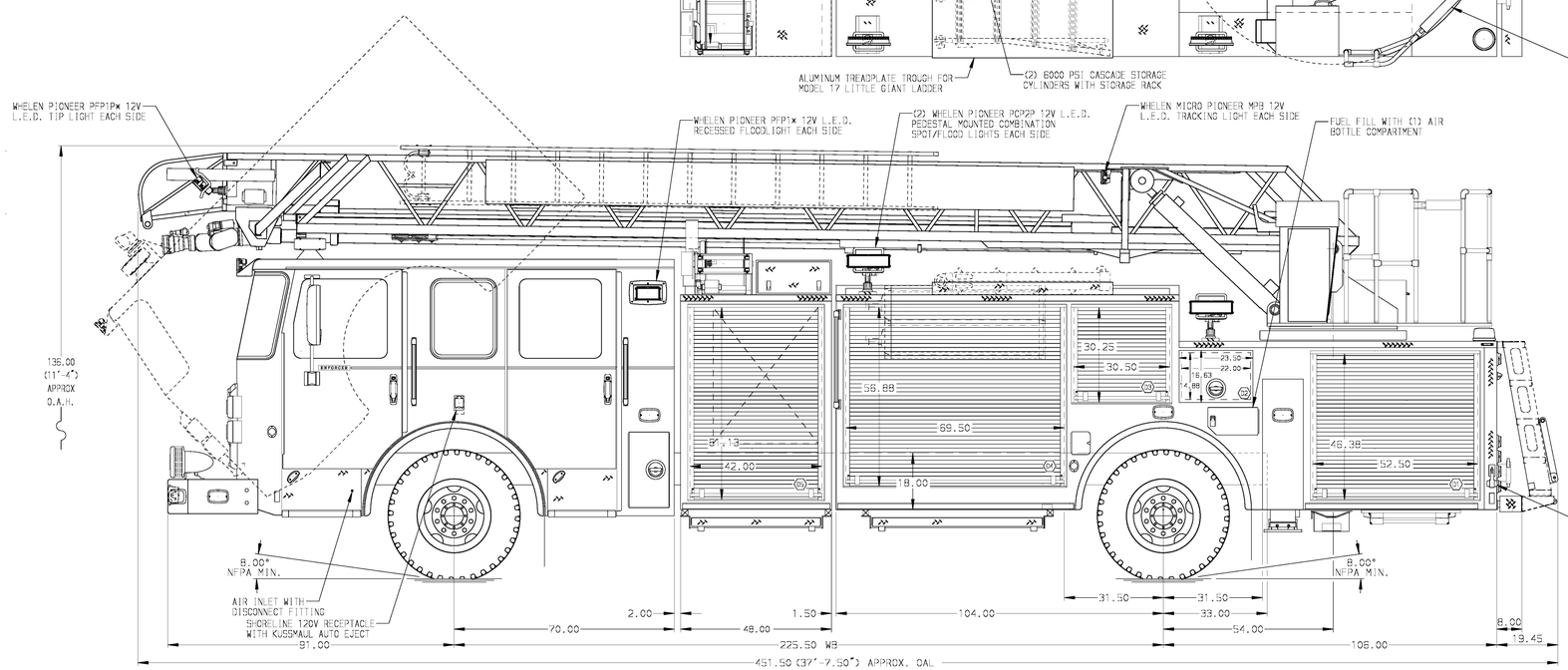

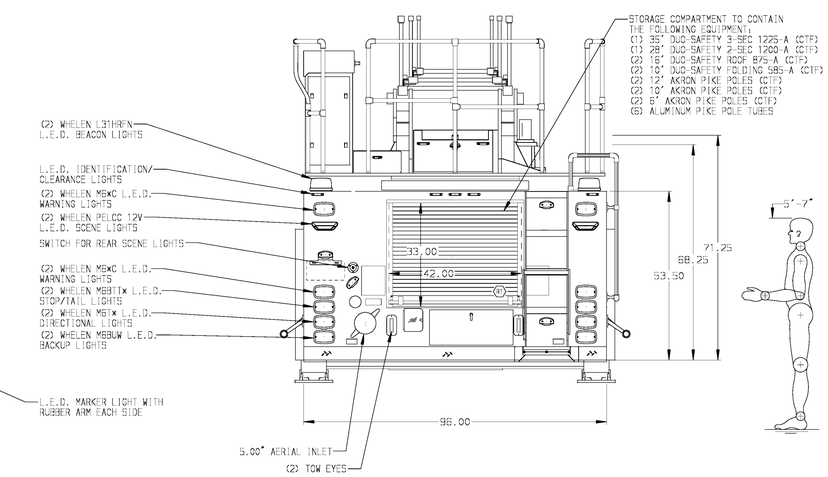

ALUMINUM BODY

NOTE

DIMENSIONS SHOWN ARE APPROXIMATE AND ARE SUBJECT TO MINOR DEVIATIONS AS MAY OCCUR OR BE NECESSARY IN CONSTRUCTION.
MINOR DETAILS NOT SHOWN.

1. VOGEL LUBE SYSTEM PUMP LOCATED PER SHOP ORDER
2. STAINLESS STEEL SCUFFPLATE ON EACH CAB DOOR JAMB
3. MOUNTING BASE FOR ANTENNA LOCATED PER SHOP ORDER
4. BATTERY CHARGER LOCATED BEHIND DRIVER SEAT
5. BATTERY CHARGER INDICATOR LOCATED ON DRIVER SIDE SEAT RISER
6. PERIMETER SCENE LIGHTS LOCATED PER SHOP ORDER
7. PULL STRAPS FOR DOORS IN COMPARTMENT-D3,P4,D5,P3,P4,P5
8. PIERCE L.E.D. LIGHT STRIPS LOCATED IN ALL SPECIFIED BODY COMPARTMENTS
9. SHELF TRACKS LOCATED IN ALL SPECIFIED BODY COMPARTMENTS
10. 500 LB. FULL WIDTH ADJUSTABLE SHELF WITH 2" SIDES IN COMPARTMENT-D5/P5
11. 500 LB. FULL WIDTH/DEPTH ADJUSTABLE SHELVES IN COMPARTMENT-ONE IN D3,P3; TWO IN D4; THREE IN P1; FOUR IN D1,P4
12. 500 LB. ADJUSTABLE SLIDE-OUT 2-WAY TRAY WITH 3" SIDES IN COMPARTMENT-D5/P5
13. 500 LB. FLOOR MOUNTED SLIDE-OUT TRAYS WITH 2" SIDES IN COMPARTMENT-D4,P4
14. ALUMINUM VERTICAL DIVIDERS IN COMPARTMENT-D1,P1,P4
15. SMOOTH POLYPROPYLENE ON THE REAR WALL IN COMPARTMENT-D5/P5
16. BACKBOARD AND LONG TOOL STORAGE IN COMPARTMENT-D5/P5
17. CIRCUIT BREAKER PANEL IN COMPARTMENT-P4
18. CONTROL PANEL FOR LOW PRESSURE TOOL SYSTEM LOCATED IN COMPARTMENT-P1
19. ONE HANNAY E1520-17-18 AIR REEL WITH 300' OF 0.25" HOSE IN COMPARTMENT-P1
20. TRIDENT FOLDING STEPS MOUNTED ON THE AERIAL DEVICE PER SHOP ORDER
21. MOUNTING BRACKETS AT THE AERIAL FLY SECTION FOR AN AXE
22. MOUNTING BRACKETS AT THE AERIAL FLY SECTION FOR A 14' DUO-SAFETY 775-A ROOF LADDER
23. TECNIQ L.E.D. RUNG STYLE LIGHTING ON AERIAL LADDER SECTIONS
24. FIRE RESEARCH 2-WAY RADIO INTERCOM SYSTEM MOUNTED PER SHOP ORDER
25. LIFTING EYE RESCUE ATTACHMENT AT AERIAL TIP

REV	DATE	BY	CH
V	15JUL15	BST	JGO
V	19JUN15	BST	JGO
V	22APR15	BST	JBL

CHASSIS DATA
MAKE: PIERCE
MODEL: ENFORCER

Pierce MANUFACTURING INC.

TITLE: 75' HSL AERIAL LADDER AND BODY ASSEMBLY NO PUMP-NO TANK
FOR: JACKSONVILLE FIRE AND RESCUE JACKSONVILLE, FL
DWG NO.: 28895AD

JOB NO.	28895 01-02
SCALE	1:24
DATE	
DRAWN BY	BST 13APR15
CHECKED BY	JBL 13APR15
SHEET SIZE	D
SHEET NO.	1 OF 1

View File Created 15-JUL-2015 07:27:33