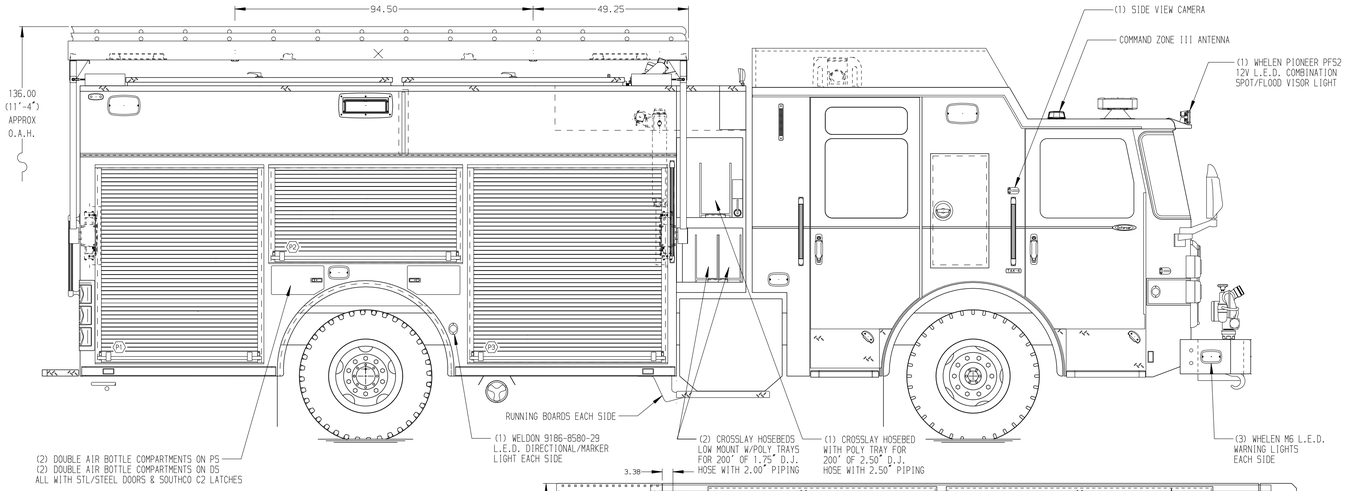

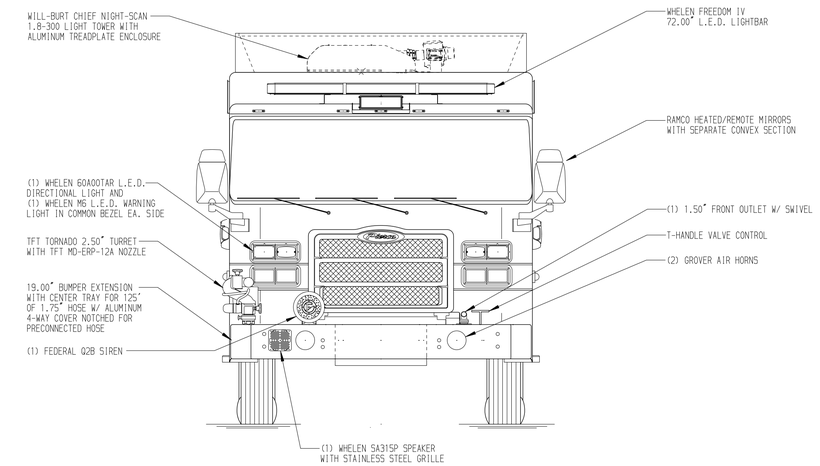

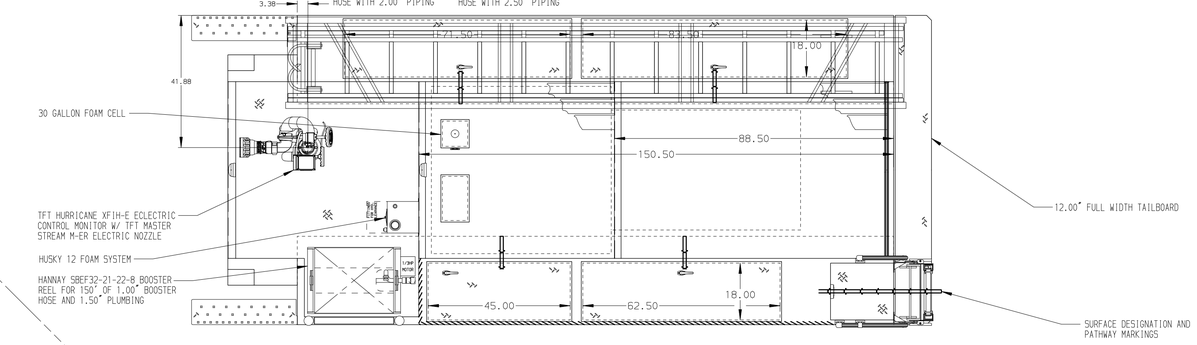

HOSEBED CAPACITIES

1. 500' OF 3.00" D.J. POLY HOSE
2. 800' OF 5.00" D.J. POLY HOSE
3. 500' OF 3.00" D.J. POLY HOSE

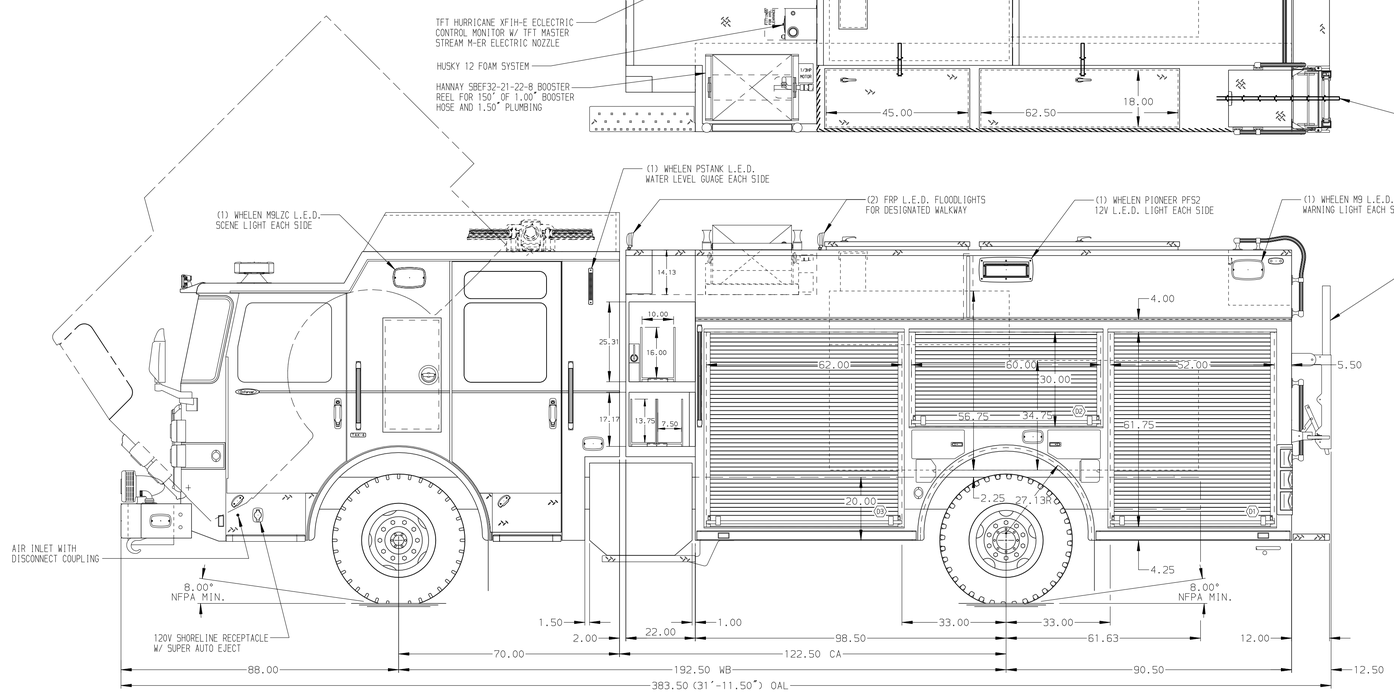

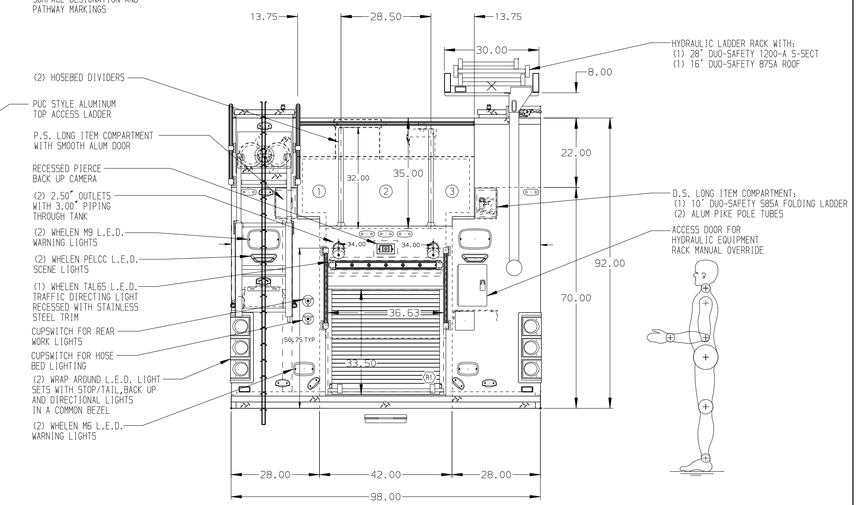

ALUMINUM BODY

SIDE ROLL AND FRONTAL IMPACT PROTECTION

NOTE

DIMENSIONS SHOWN ARE APPROXIMATE AND ARE SUBJECT TO MINOR DEVIATIONS AS MAY OCCUR OR BE NECESSARY IN CONSTRUCTION.
MINOR DETAILS NOT SHOWN.

1. ONSPOT AUTOMATIC TIRE CHAINS TO BE PROVIDED AT REAR
2. BATTERY CHARGER LOCATED IN COMPARTMENT D3
3. BATTERY CHARGE INDICATOR LOCATED ON DRIVER'S SEAT RISER
4. ONE ADJUSTABLE TILTING SLIDE-OUT TRAY IN COMPARTMENT P3
5. ONE FLOOR MOUNTED SLIDE-OUT TRAY IN COMPARTMENT D1, P1, P3, & R1
6. TWO SWING-OUT ALUMINUM TOOL BOARDS IN COMPARTMENT D2
7. ONE 120V DUPLEX RECEPTACLE ON FRONT WALL OF COMPARTMENT P2
8. TWO SHELVES IN D1 & P1, ONE IN COMPARTMENTS D3, P2, & P3.

REV	DATE	BY	CH
7	15MAR17	GVH	JJR
6	08MAR17	GVH	MSA
5	27JAN17	GVH	MSA
4	01DEC16	GVH	SMA

CHASSIS DATA
MAKE: PIERCE
MODEL: ENFORCER

Pierce MANUFACTURING INC.

TITLE: 1500-D-750 GAL POLY W/30 GAL FOAM CELL, 189" RESCUE (3)XLAYS, DELUGE, BOOSTER REEL, HYD. LADDER RACK
FOR: LIVINGSTON FIRE & RESCUE, LIVINGSTON, MONTANA
DWG NO.: 30616AD

JOB NO.	30616
SCALE	1:24
DATE	
DRAWN BY	GVH
	15NOV16
CHECKED BY	SMA
	16NOV16
SHEET SIZE	D
SHEET NO.	1 OF 1

View File Created 15-MAR-2017 11:10:00