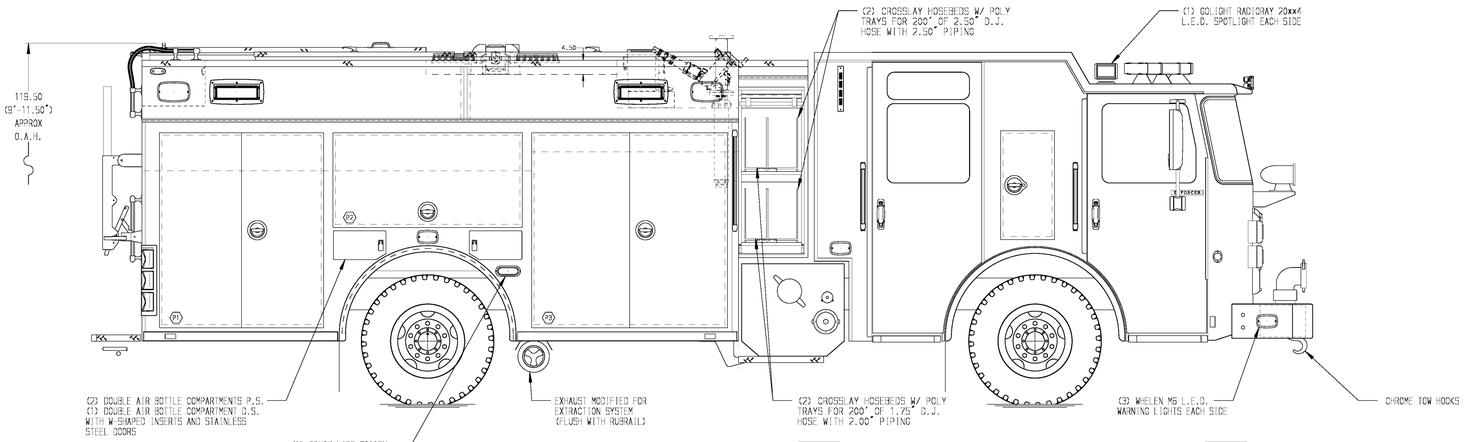

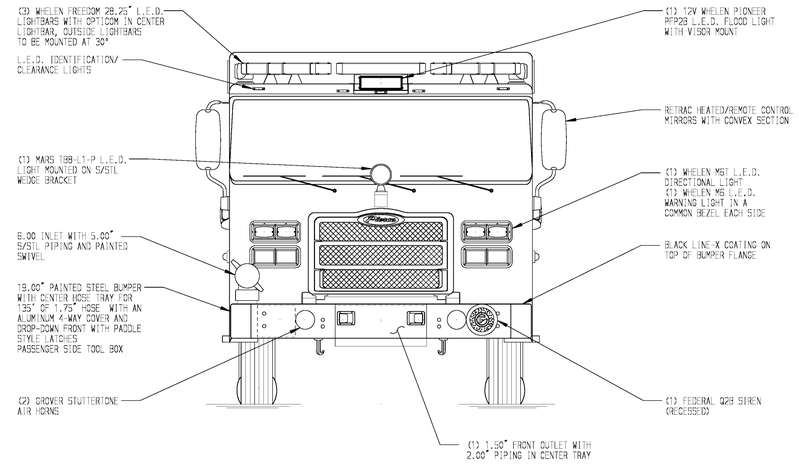

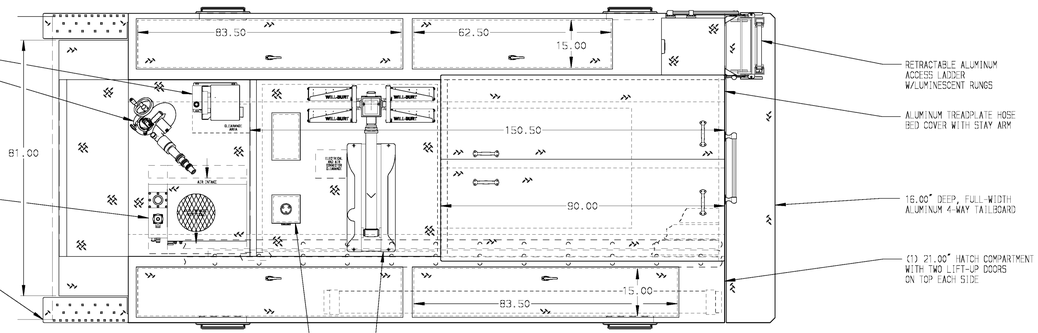

HOSEBED CAPACITIES

1. 200' OF 2.50" D.J. HOSE
2. 100' OF 1.75" D.J. HOSE (TOP)
   100' OF 2.50" D.J. HOSE (TOP)
   800' OF 3.00" D.J. HOSE (BOTTOM)
3. 800' OF 5.00" D.J. HOSE

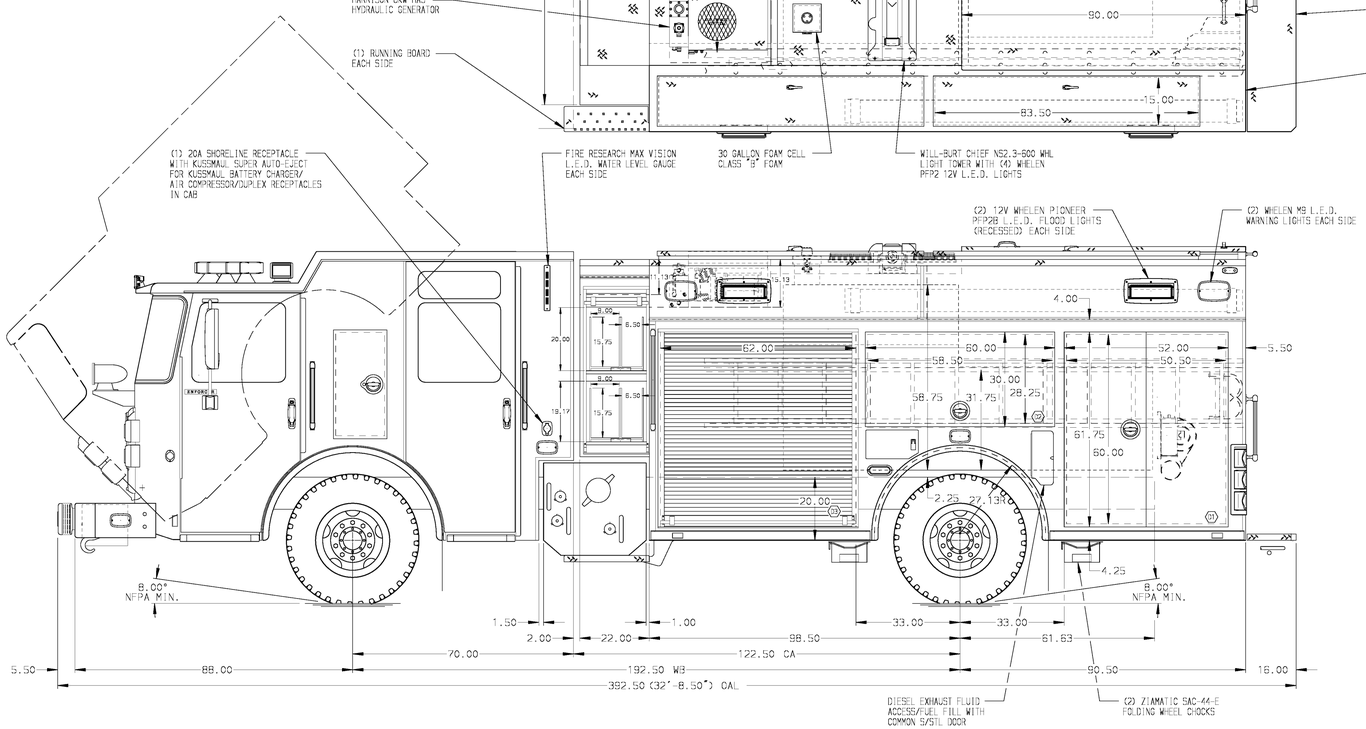

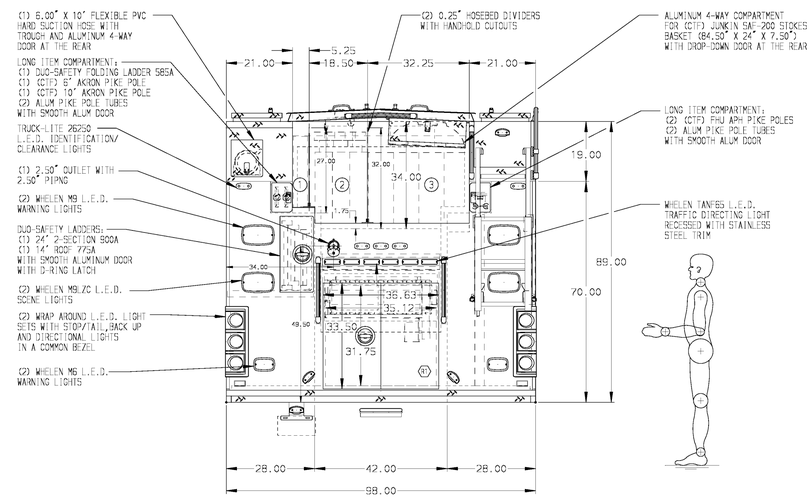

STAINLESS STEEL BODY

MAXIMUM O.A.H. 124.00"

SIDE ROLL PROTECTION

NOTE

DIMENSIONS SHOWN ARE APPROXIMATE AND ARE SUBJECT TO MINOR DEVIATIONS AS MAY OCCUR OR BE NECESSARY IN CONSTRUCTION.
MINOR DETAILS NOT SHOWN.

1. WOGEL LUBE SYSTEM PUMP LOCATED PER SHOP ORDER
2. S/STL SCUFFPLATE ON EACH CAB DOOR JAMB
3. MOUNTING BASES FOR ANTENNAS LOCATED PER SHOP ORDER
4. KUSSMAUL PUMP PLUS 1000 BATTERY CHARGER/AIR COMPRESSOR IN COMPARTMENT P3
5. BATTERY CHARGER INDICATOR LOCATED ON D.S. SEAT RISER
6. PERIMETER SCENE LIGHTS LOCATED PER SHOP ORDER
7. AMDOR LUMABAR H20 AY-9500-040 40.00" L.E.D. HOSE BED LIGHTS
8. PIERCE L.E.D. DUAL COMPARTMENT LIGHT STRIPS LOCATED PER SHOP ORDER
9. ONE ADJUSTABLE FULL WIDTH/FULL DEPTH SHELF IN COMPARTMENTS D1, D3 P1 & P3
10. ONE FLOOR MOUNTED SLIDE-OUT TRAY WITH 2.00" SIDES IN COMPARTMENTS D1, P1, P3 & R1
11. ALUMINUM SWING-OUT TOOLBOARD WITH PAC TRAC IN COMPARTMENT P2
12. CTECH 3-DRAWER ASSEMBLY IN COMPARTMENT D3
13. PAC TRAC ON THE REAR WALL OF COMPARTMENTS D1, D2 & D3
14. MOUNTING RACK FOR (3) FIRE EXTINGUISHERS IN COMPARTMENT P3
15. S/STL SCUFFPLATE ON LOWER HORIZONTAL CROSSLAY OPENINGS
16. CIRCUIT BREAKER PANEL IN COMPARTMENT P3
17. STAINLESS STEEL FENDER CROWNS FRONT AND REAR
18. PIERCE LOGO MUDFLAPS FRONT AND REAR
19. ALUMINUM 4-WAY SCUFFPLATE ON REAR CAB CORNERS, FRONT BULKHEADS AND FRONT BODY CORNERS
20. STAINLESS STEEL SCUFFPLATES ON REAR BODY CORNERS
21. ONE AKRON ELECTRIC REWIND CABLE REEL ERWC-10-28 IN COMPT. R1 WITH 200' OF 10/3 CABLE AND WOODHEAD JUNCTION BOX
22. ONE 15A, 120V DUPLEX RECEPTACLE IN EACH EMS CABINET
23. REMOVABLE ACCESS PLATE FOR SHORELINE ON DS REAR OF CAB
24. STORAGE BIN FOR (2) FIRE EXTINGUISHERS IN FLOOR TRAY IN COMPARTMENT P3

REV	DATE	BY	CH
1	22JUN15	NPA	JBO
2	20MAY15	NPA	JBO

CHASSIS DATA
MAKE: PIERCE
MODEL: ENFORCER

Pierce MANUFACTURING INC.

TITLE: 1500-D-750P W/30 GAL FOAM CELL, 189" RESCUE PUC (4) XLAYS, LADDERS THRU BODY, DELUGE, GENERATOR

FOR: LOCKPORT TOWNSHIP FIRE PROTECTION DISTRICT
LOCKPORT, ILLINOIS

DWG NO.: 28661AD

JOB NO.	28661
SCALE 1:24	DATE
DRAWN BY NPA	19FEB15
CHECKED BY CSH	19FEB15
SHEET SIZE D	SHEET NO. 1 OF 1

View File Created 25-JUN-2015 13:30:18