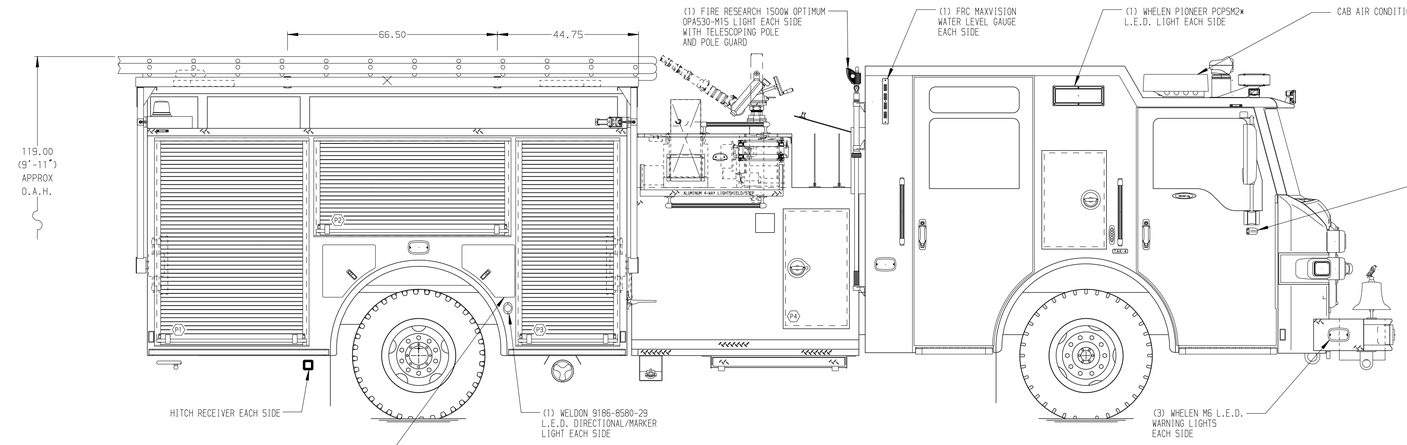

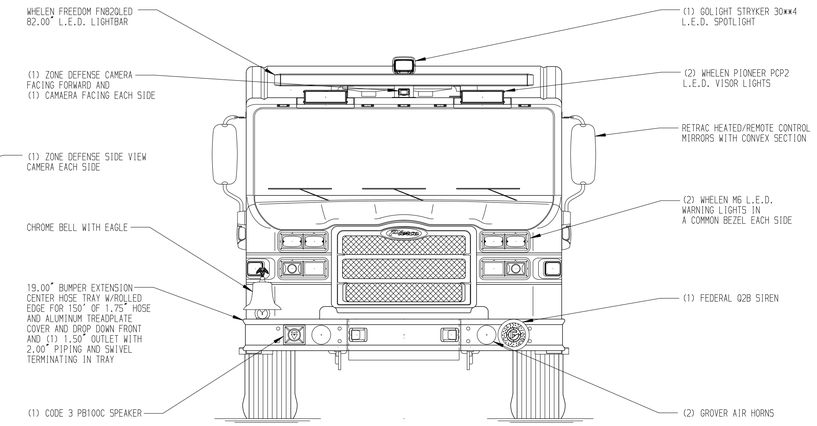

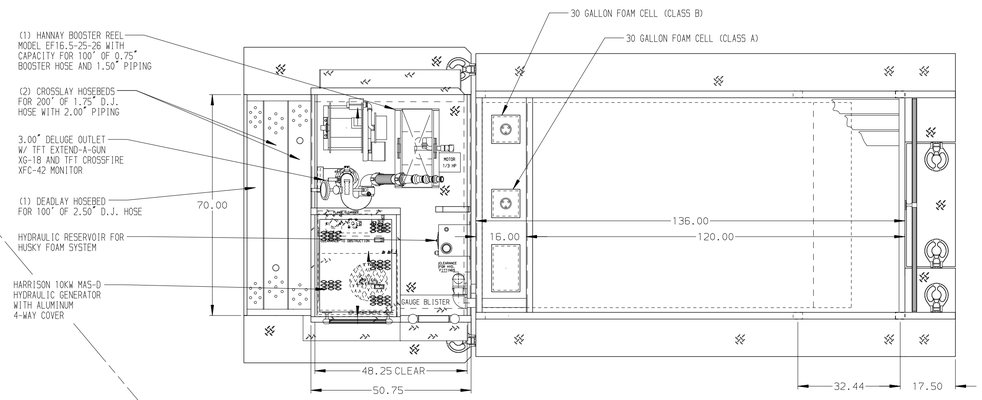

HOSEBED CAPACITIES

1. 200' OF 3.00" D.J. POLY HOSE
2. 800' OF 3.00" D.J. POLY HOSE
3. 1000' OF 4.00" D.J. POLY HOSE

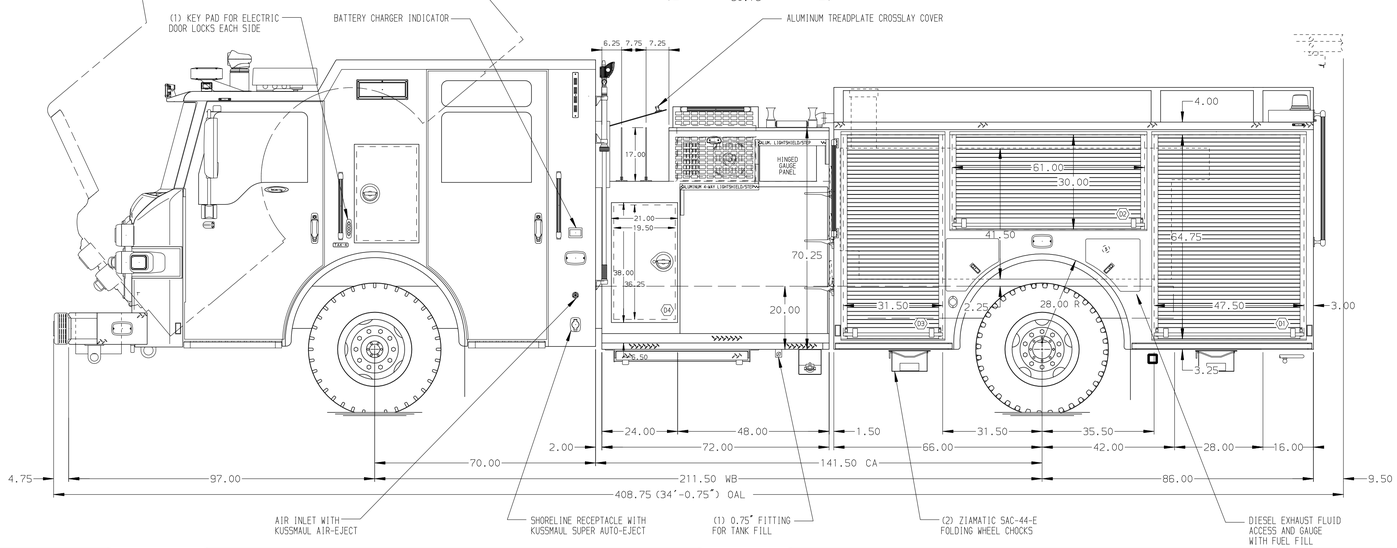

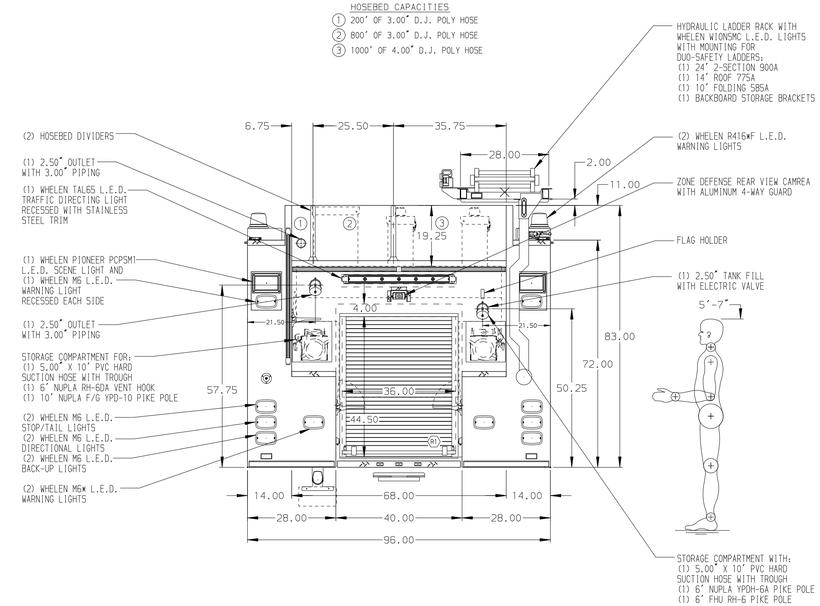

ALUMINUM BODY

OVERALL HEIGHT TARGET 119.00"

SIDE ROLL AND FRONTAL IMPACT PROTECTION

NOTE

DIMENSIONS SHOWN ARE APPROXIMATE AND ARE SUBJECT TO MINOR DEVIATIONS AS MAY OCCUR OR BE NECESSARY IN CONSTRUCTION.
MINOR DETAILS NOT SHOWN.

1. ONSPOT AUTOMATIC TIRE CHAINS TO BE PROVIDED AT REAR
2. AIR OUTLET W/ SHUT OFF VALVE LOCATED ON DS PUMP PANEL
3. BATTERY CHARGER LOCATED IN CREW CAB SEAT RISER
4. ONE FULL WIDTH/DEPTH PAINTED ADJUSTABLE SHELF IN COMPARTMENTS D2, D3, D4, & P4; TWO IN P3; AND THREE IN D1 & P1
5. ONE FLOOR MOUNTED SLIDE-OUT TRAY IN COMPARTMENTS D1, D3, P1, P3, & R1
6. CIRCUIT BREAKER PANEL IN COMPARTMENT D3
7. ONE HANNAY ELECTRIC REWIND CORD REEL MODEL 1618-17-18 LOCATED IN CARGO AREA WITH 200' OF 10/3 CABLE
8. ONE 120V DUPLEX RECEPTACLE LOCATED IN CAB
9. TWO 120V DUPLEX WATERPROOF RECEPTACLES LOCATED IN COMPARTMENT D3
10. ONE 240V RECEPTACLE LOCATED IN COMPARTMENT D3
11. ELECTRIC DOOR LOCKS LOCATED IN COMPARTMENTS D1, D2, D3, D4, P1, P2, P3, P4, & R1
12. ONE ADJUSTABLE SHELF W/ 45 DEGREE 1" FRONT LIP LOCATED IN COMPARTMENTS D1 & P3
13. ONE ADJUSTABLE SHELF W/ 1.00" LIP LOCATED IN COMPARTMENTS D4 & P4
14. ONE SWING OUT TOOLBOARD LOCATED IN COMPARTMENT P2
15. TWO SETS OF HORIZONTAL EQUIPMENT MOUNTING TRACKS LOCATED IN COMPARTMENT P2

REV	DATE	BY	CH
D	22MAR16	COL	MSA
C	12MAR16	COL	MSA
B	12FEB16	COL	MSA
A	04DEC15	COL	SMA

CHASSIS DATA — MAKE: PIERCE — MODEL: VELOCITY

Pierce MANUFACTURING INC.

TITLE: 1250-D-750 GAL POLY W/(2)30 GAL FOAM CELLS,152"FDLER (2)XLAYS,(1)DEADLAY, DELUGE, HYDRAULIC LADDER RACK

FOR: MEDFORD FIRE DEPARTMENT, MEDFORD, OREGON

DWG NO.: 29545AD

JOB NO.	29545
SCALE	1:24
DATE	
DRAWN BY	COL 17NOV15
CHECKED BY	SMA 19NOV15
SHEET SIZE	D
SHEET NO.	1 OF 1

View File Created 22-MAR-2016 15:53:28