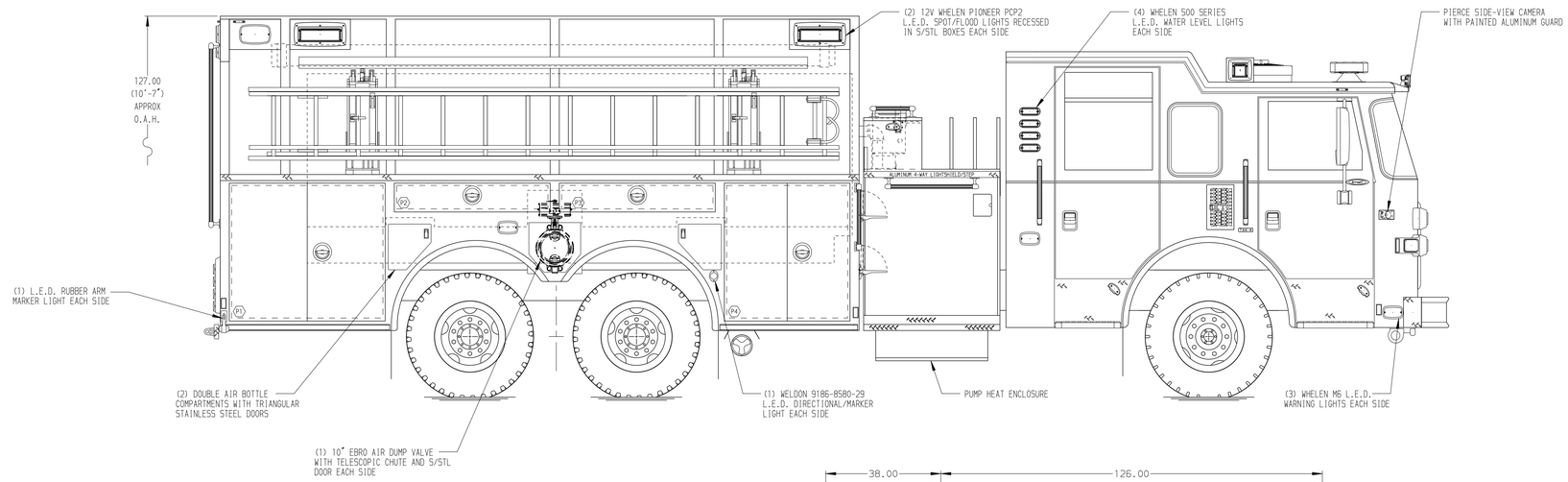

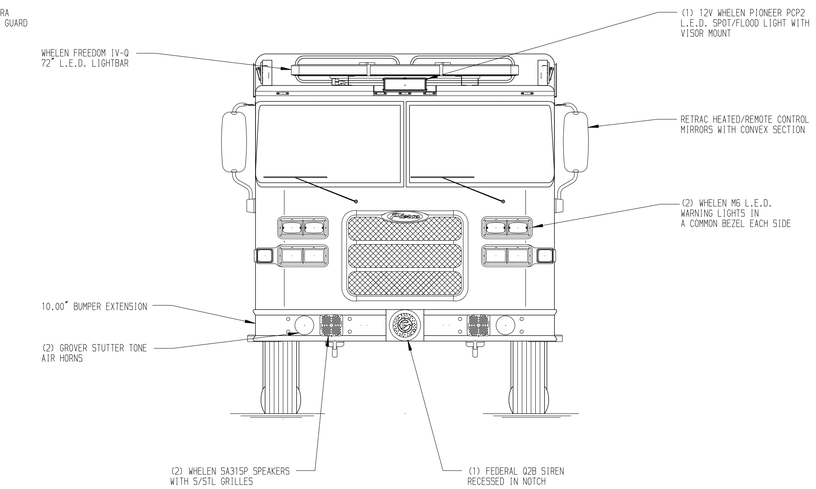

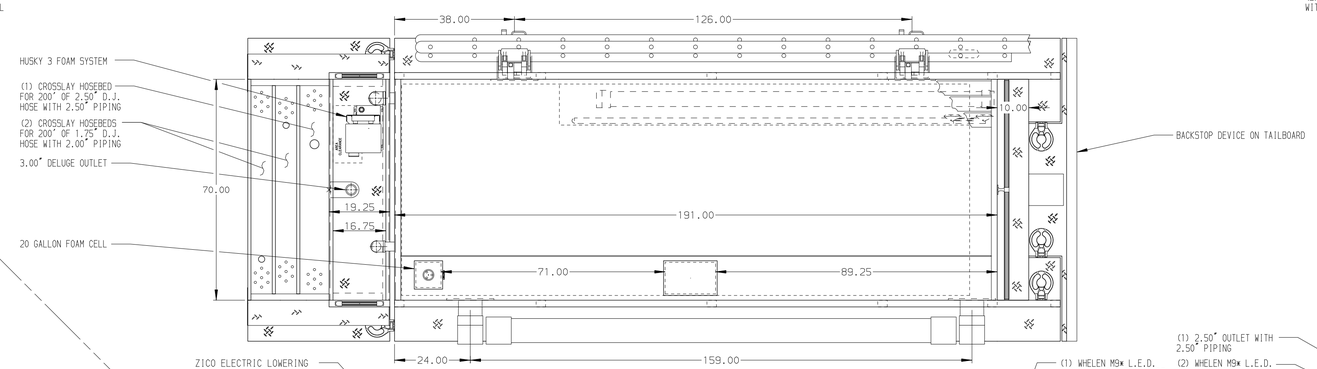

HOSEBED CAPACITIES

1. 300' OF 3.00" MERCEDES HOSE
2. 200' OF 2.50" MERCEDES HOSE
3. 200' OF 2.50" MERCEDES HOSE
4. 1200' OF 5.00" MERCEDES HOSE
5. 200' OF 1.75" MERCEDES HOSE
6. 200' OF 1.75" MERCEDES HOSE
7. 200' OF 1.75" MERCEDES HOSE

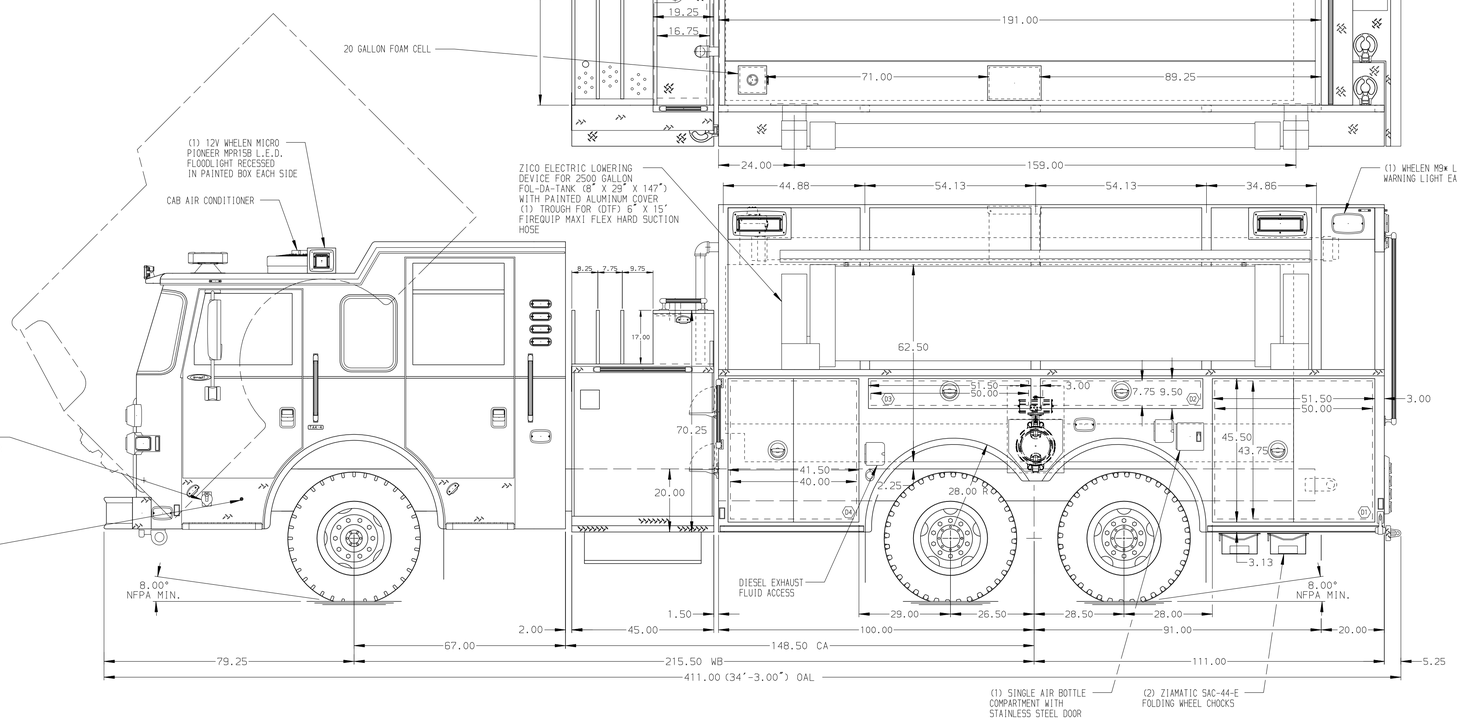

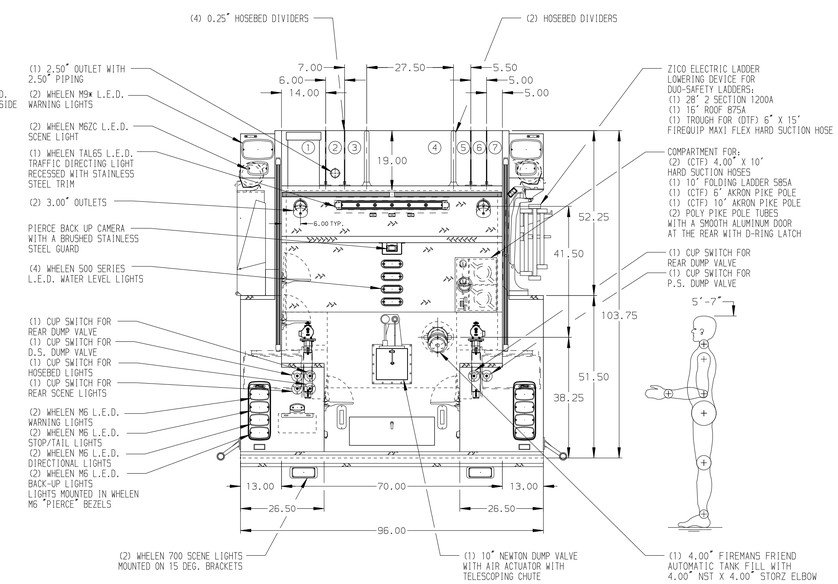

ALUMINUM BODY

SIDE ROLL AND FRONTAL IMPACT PROTECTION

NOTE

DIMENSIONS SHOWN ARE APPROXIMATE AND ARE SUBJECT TO MINOR DEVIATIONS AS MAY OCCUR OR BE NECESSARY IN CONSTRUCTION.
MINOR DETAILS NOT SHOWN.

1. KUSSMAUL 091-216-20/20 BATTERY CHARGER LOCATED BEHIND DRIVER'S SEAT
2. ONE L.E.D. LIGHT STRIP LOCATED ON EACH SIDE IN THE HOSEBED
3. ONE PAINTED FULL WIDTH/DEPTH PAINTED ADJUSTABLE SHELF IN COMPARTMENTS D1 & D4
4. ONE PAINTED FULL WIDTH/10" DEEP ADJUSTABLE SHELF IN COMPARTMENTS D1, D4, P1 & P4
5. ONE PAINTED FLOOR MOUNTED SLIDE-OUT TRAY IN COMPARTMENTS D1, D4 & P1
6. ONE OPEN TOP ALUMINUM 4-WAY BOX (15"W X 7.50"D X 14"H) WITH STRAP FOR STOZ SIAMESE VALVE MOUNTED AT PICKUP
7. THREE 6" HANDRAILS SHIPPED LOOSE
8. HANDHOLD CUTOUTS IN DIVIDERS BETWEEN #1 AND #2, BETWEEN #6 AND #7

REV	DATE	BY	CH
3	09SEP16	NPA	PJP
2	28APR16	NPA	PJP
1	24MAR16	NPA	CSH

CHASSIS DATA
MAKE: PIERCE
MODEL: ARROW-XT

Pierce MANUFACTURING INC.

TITLE: 1750-D-2500P W/20 GAL FOAM CELL,211" 3/4 BROOM FDLER (3) XLAYS, ZICO LADDER RACK, TANK DUMPS, DELUGE

FOR: MEREDITH FIRE DEPARTMENT
MEREDITH, NEW HAMPSHIRE

DWG NO.: 30070AD

JOB NO.	30070
SCALE	1:24
DATE	
DRAWN BY	NPA
DATE	14MAR16
CHECKED BY	CSH
DATE	14MAR16
SHEET SIZE	D
SHEET NO.	1 OF 1

View File Created 12-SEP-2016 13:08:18