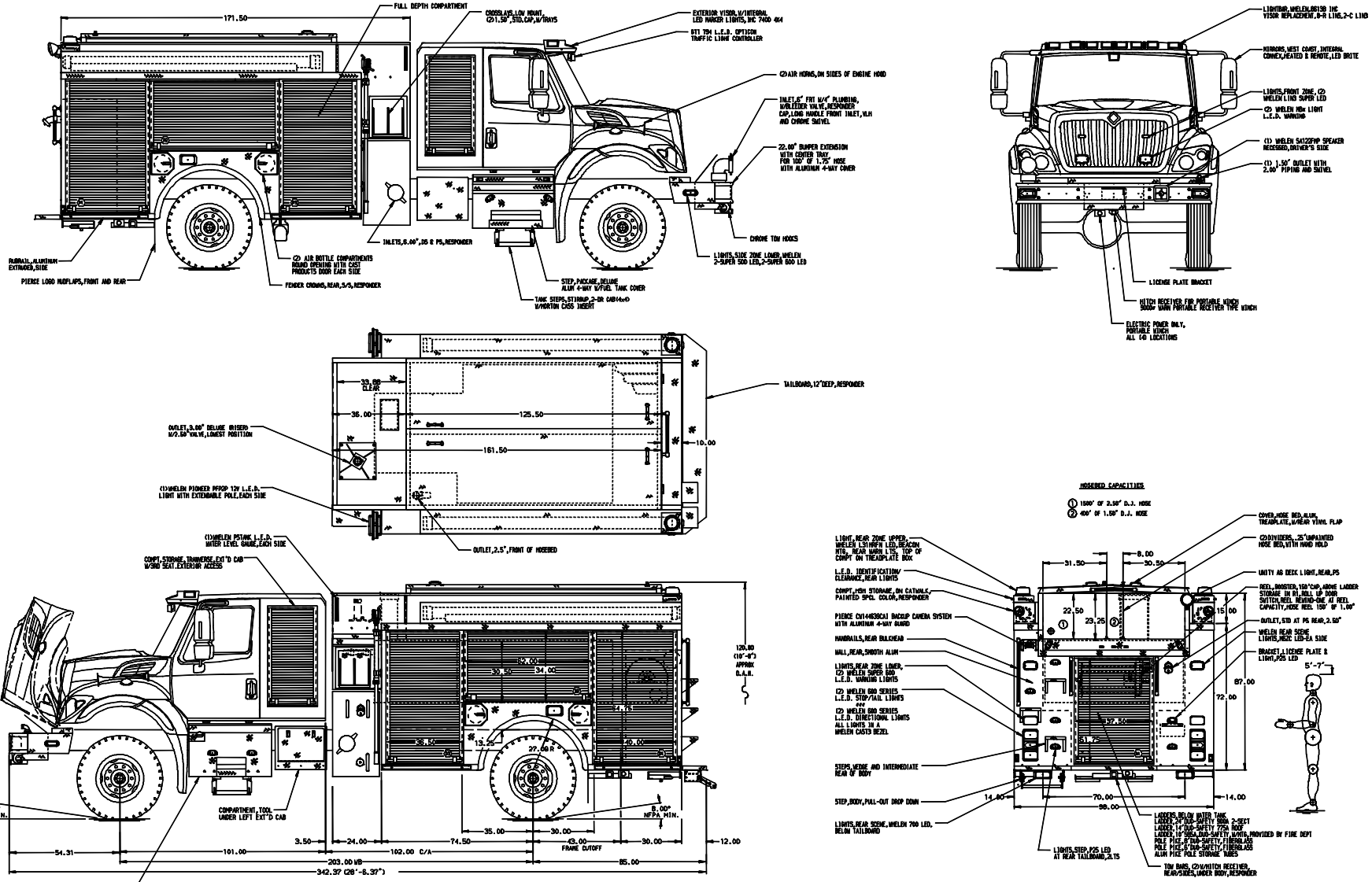

ALUMINUM BODY

120.00" O.A.H. MAX

NOTE

DIMENSIONS SHOWN ARE APPROXIMATE AND ARE SUBJECT TO MINOR DEVIATIONS AS MAY OCCUR OR BE NECESSARY IN CONSTRUCTION.
MINOR DETAILS NOT SHOWN.

1. AIR INLET,W/DISCONNECT COUPLING LOCATED DS CAB STEP AREA
2. EXHAUST SYSTEM,HORIZONTAL,RIGHT SIDE EXIT,4400/2000 SERIES INC
3. PERIMETER SCENE LIGHTS LOCATED PER SHOP ORDER
4. BATTERY CHARGE INDICATOR LOCATED ON D.S. SEAT RISER
5. SHORELINE,20AMP,LOCATED DS CAB STEP AREA
6. PIERCE L.E.D. COMPARTMENT DUAL LIGHT STRIPS LOCATED PER SHOP ORDER
7. UNPAINTED SHELF TRACKS LOCATED IN COMPARTMENTS R1&P1 AT TRANSITION,& P3
8. FLOOR MOUNTED SLIDE OUT TRAYS 50LB,LOCATED IN D1,P1 & 1 EA IN THE EXTENDED CAB ROLLUP DOOR COMPARTMENTS
9. ALUMINUM SWING-OUT TOOLBOARD WITH PAC TRAC IN COMPARTMENT P2
10. TURTLE TILE W/RAMP MATTING ON ALL COMPARTMENT FLOORS (2)

REV	DATE	BY	CH
3	27AUG14	JCH	VKO
2	17JUL14	DTA	VKO
1	15MAY14	DTA	BGC

CHASSIS DATA: MAKE JHC; MODEL 7400 4X4; DWG NO. 27950AD

Pierce MANUFACTURING INC.
BRADENTON, FLORIDA

TITLE: 1250-D-750 POLY 147.5"BODY DS & PS FULL HEIGHT (2)SPEEDLAYS
FOR: NORTON FIRE DEPARTMENT, MA NORTON,MASSACHUSETTS

JOB NO.	27950
SCALE	1:24
DATE	
DRAWN BY	JAF
	21APR14
CHECKED BY	JCH
	05MAY14
SHEET SIZE	D
SHEET NO.	1 of 1

View File Created 29-AUG-2014 16:00:54