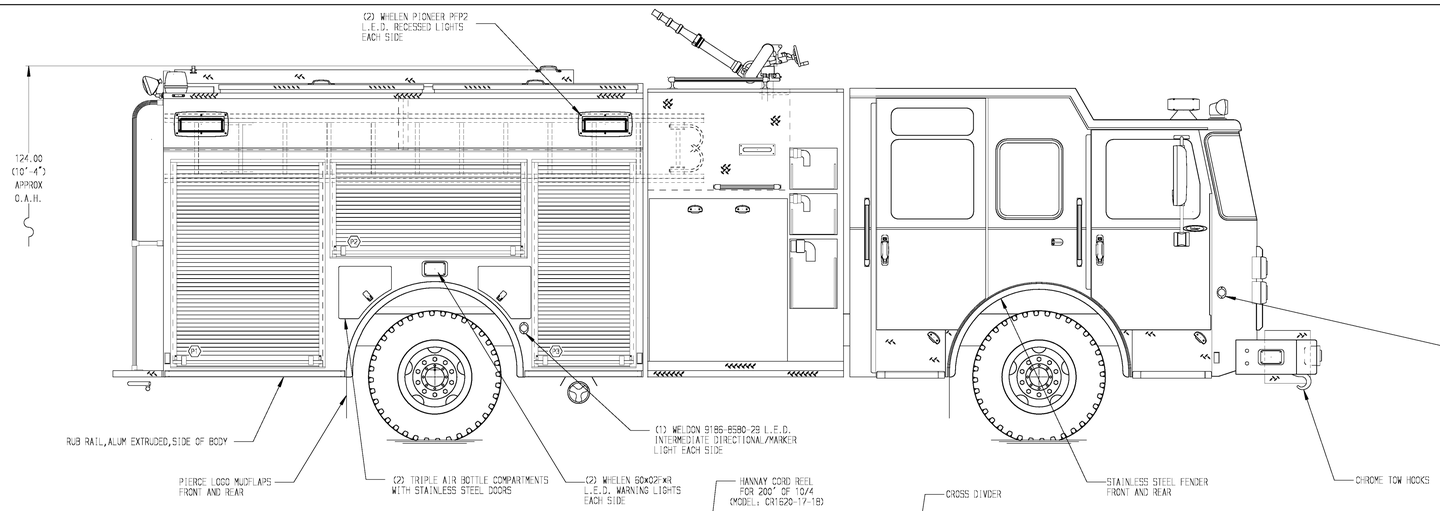

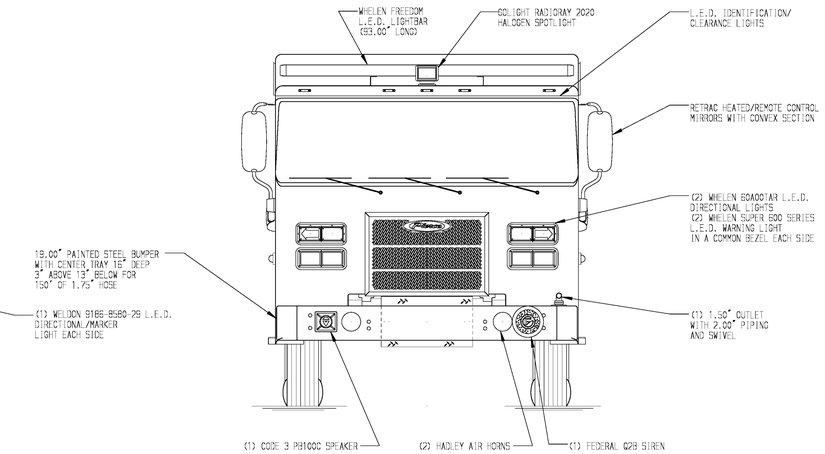

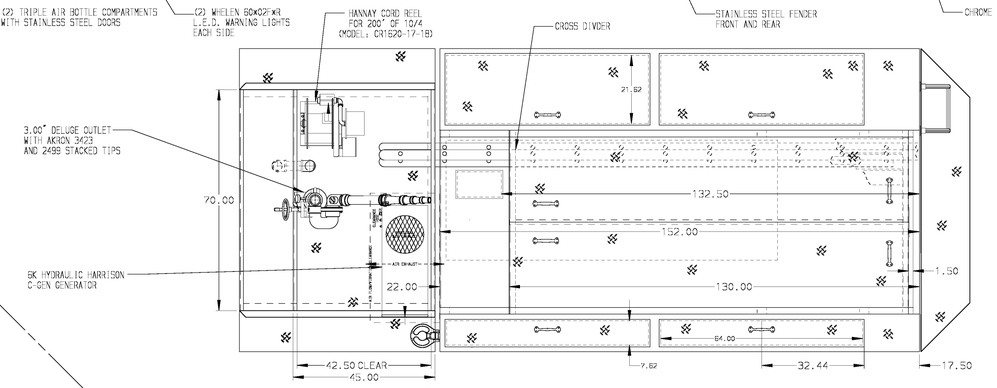

HOSEBED CAPACITIES
1. 300' OF 2.50" D.J. POLY HOSE
2. 300' OF 3.00" D.J. POLY HOSE
3. 1200' OF 5.00" D.J. POLY HOSE

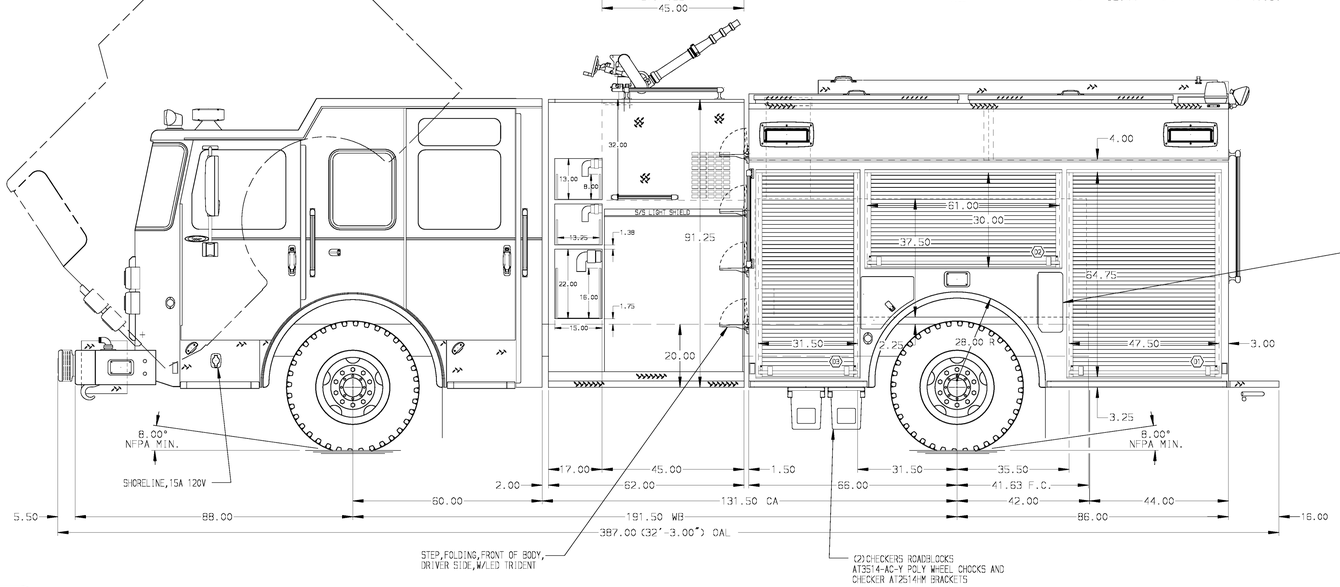

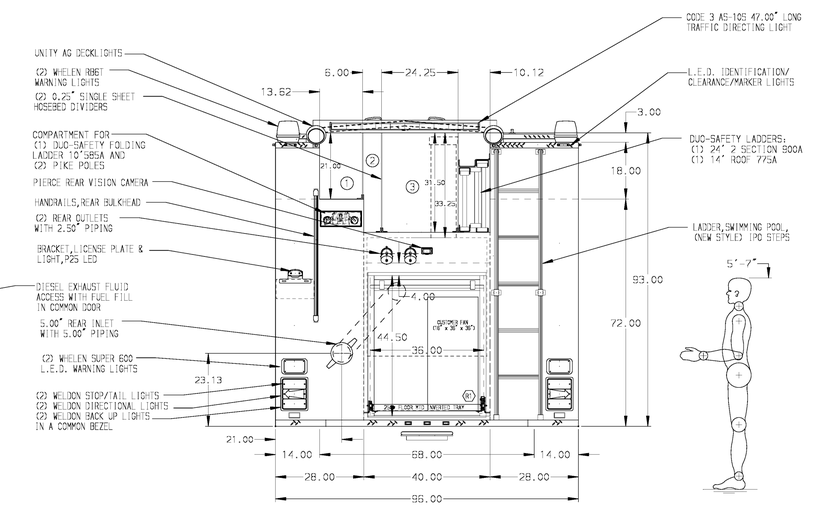

ALUMINUM BODY

NOTE

DIMENSIONS SHOWN ARE APPROXIMATE AND ARE SUBJECT TO MINOR DEVIATIONS AS MAY OCCUR OR BE NECESSARY IN CONSTRUCTION.
MINOR DETAILS NOT SHOWN.

REV	DATE	BY	CH
7	04DEC15	JLA	VMO
6	12NOV15	JLA	VMO

CHASSIS DATA
MAKE: PIERCE
MODEL: SABER FR

Pierce MANUFACTURING INC.

TITLE: 1500-D-500P,152, FULL HEIGHT AND DEPTH DS & PS (3) SPD-LAYS,DELUGE,GENERATOR,REELS

FOR: PEORIA HEIGHTS FIRE DEPARTMENT
PEORIA HEIGHTS, ILLINOIS

DWG NO. 29015AD

JOB NO.	29015
SCALE	1:24
DATE	
DRAWN BY	TES 24JUN15
CHECKED BY	WKL 24JUN15
SHEET SIZE	D
SHEET NO.	1 OF 1

View File Created 07-DEC-2015 11:00:35