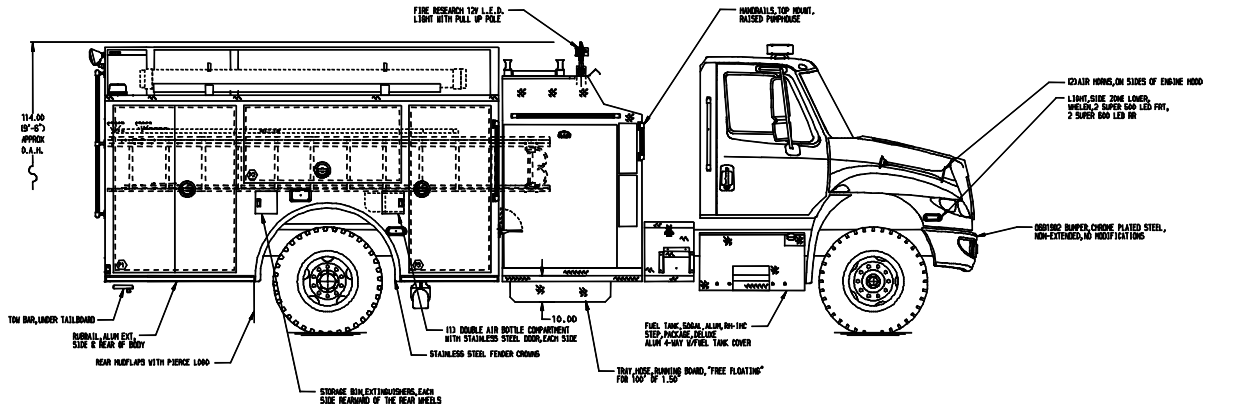

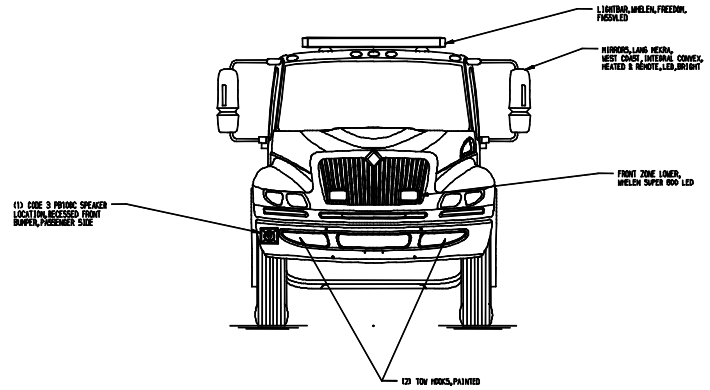

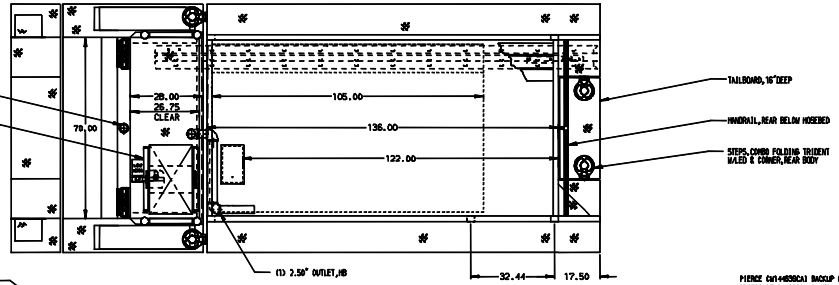

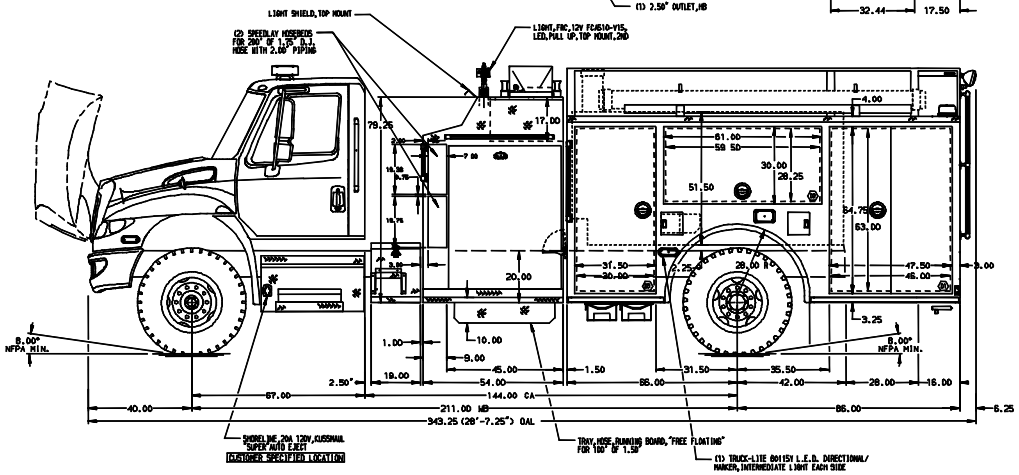

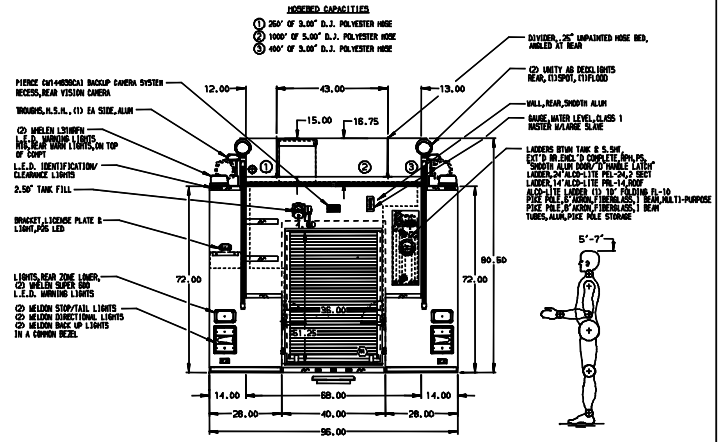

ALUMINUM BODY

NOTE
DIMENSIONS SHOWN ARE APPROXIMATE AND ARE SUBJECT TO MINOR DEVIATIONS AS MAY OCCUR OR BE NECESSARY IN CONSTRUCTION.
MINOR DETAILS NOT SHOWN.

1. TIRE CHAINS,ONSPOT AUTOMATIC TIRE
2. (2) WHEEL CHOCKS,SAC-44-E,FOLDING,SPECIAL LOCATION
3. MOUNTING BRKTS,CHOCKS,SAC-44-E,FOLDING,HORIZONTAL LOCATED PER SHOP ORDER
4. AIR INLET LOCATED DS PUMP PANEL
5. EXHAUST SYSTEM,HORIZONTAL,RIGHT SIDE EXT,4400/7600 SERIES IHC
6. RECEPTACLE FOR KUSSMAUL BATTERY CHARGER/AIR COMPRESSOR LOCATED IN D3
7. BATTERY CHARGER LOCATED D3
8. BATTERY CHARGE INDICATOR LOCATED ON D.S. SEAT RISER
9. SHORELINE RECEPTACLE WITH KUSSMAUL SUPER AUTO-EJECT LOCATED IN DS STEP WELL
10. PERIMETER SCENE LIGHTS LOCATED PER SHOP ORDER
11. TRUCK-LITE COMPARTMENT LIGHTS LOCATED PER SHOP ORDER
12. UNPAINTED SHELF TRADS IN EACH COMPARTMENT
13. ONE FULL WIDTH/DEPTH PAINTED ADJUSTABLE SHELF IN COMPARTMENTS D1,D3,P1,P3,R1
14. FLOOR MOUNTED SLIDE-OUT TRAY IN COMPARTMENT D1,D3
15. ALL FOLDING STEPS TO BE TRIDENT WITH INTEGRATED L.E.D. LIGHT UNLESS SPECIFIED

REV	DATE	BY	CH
2	23SEP14	END	VKO
1	16JUL14	DTA	VKO

CHASSIS DATA
MAKE: IHC
MODEL: 4400

Pierce MANUFACTURING INC.
BRADENTON, FLORIDA

TITLE: 1500-D-1000 POLY 152"BODY DS & PS FULL HEIGHT 45"TOP MOUNT (2)SPEEDLAYS
FOR: PICKENS RURAL FIRE DISTRICT PICKENS,SOUTH CAROLINA
DWG NO. 28038AD

JOB NO.	28038
SCALE 1:24	DATE
DRAWN BY JAF	16MAY14
CHECKED BY JCH	22MAY14
SHEET SIZE D	SHEET NO. 1 OF 1

View File Created 23-SEP-2014 12:24:34