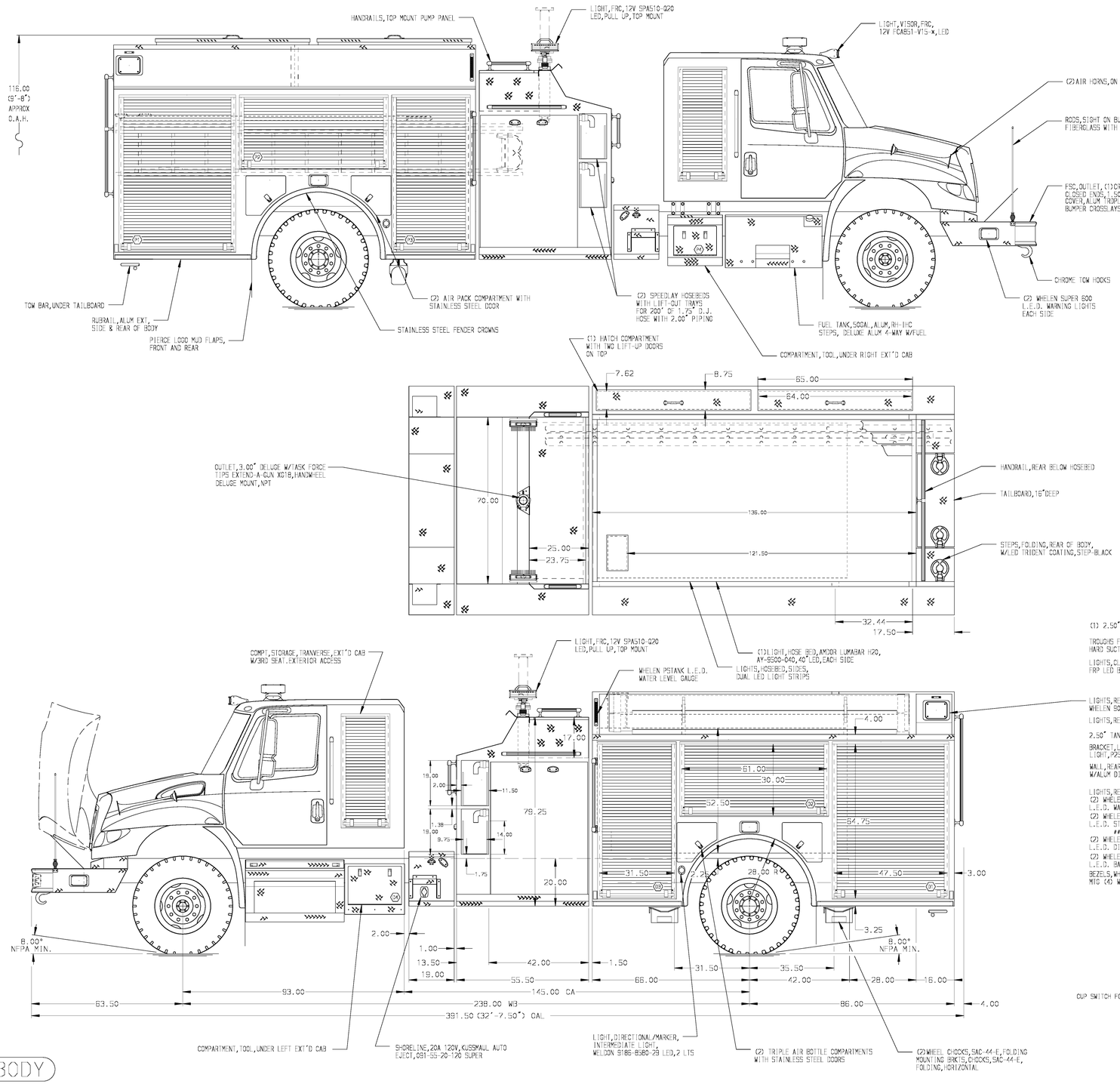

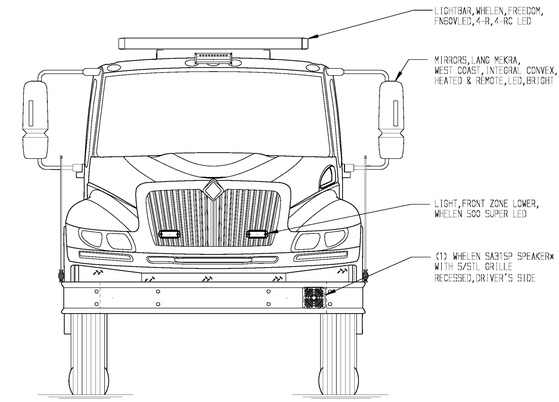

HOSEBED CAPACITIES
1. 600' OF 3.00" D.J. POLYESTER HOSE
2. 600' OF 3.00" D.J. POLYESTER HOSE
3. 400' OF 3.00" D.J. POLYESTER HOSE

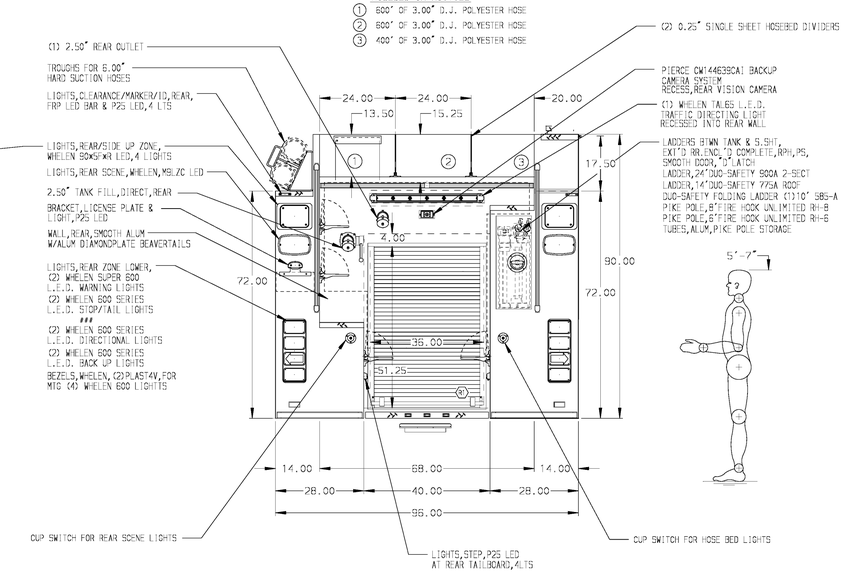

ALUMINUM BODY

NOTE
DIMENSIONS SHOWN ARE APPROXIMATE AND ARE SUBJECT TO MINOR DEVIATIONS AS MAY OCCUR OR BE NECESSARY IN CONSTRUCTION.
MINOR DETAILS NOT SHOWN.

REV.	DATE	BY	CHK'D	
				CHASSIS DATA
V	05JAN16	JLA	VMC	CHASSIS
V	13NOV15	JLA	VMC	IHC
V	25SEP15	RWI	JAF	MODEL
				4400

Pierce MANUFACTURING INC.
BRADENTON, FLORIDA

TITLE	1250-D-1000 POLY,152"BODY,DS & PS FULL HEIGHT 42"TOP MOUNT, (2)SPEEDLAYS W/POLY TRAYS	JOB NO.	29231
		DATE	SCALE 1:24
		11AUG15	DRAWN BY JAF
FOR	TOWN OF ROCKVILLE ROCKVILLE, INDIANA	13AUG15	CHK'D BY RWI
DRWG. NO.	29231AD	SHEET NO. 1 OF 1	SHEET SIZE D

View File Created 07-JAN-2016 08:01:37