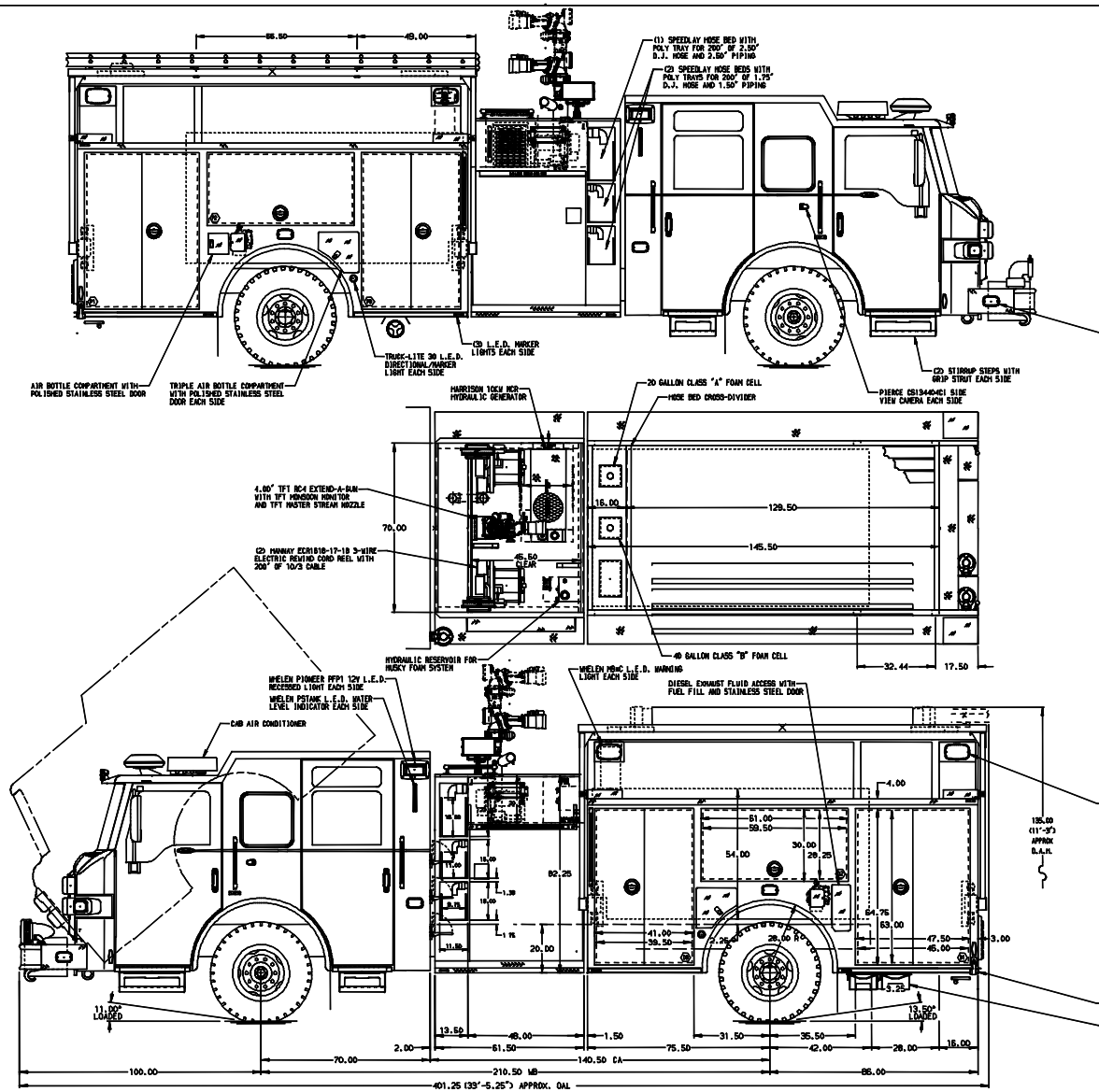

STAINLESS STEEL BODY

MAXIMUM O.A.L. 401.25"

MAXIMUM O.A.H. 135.00"

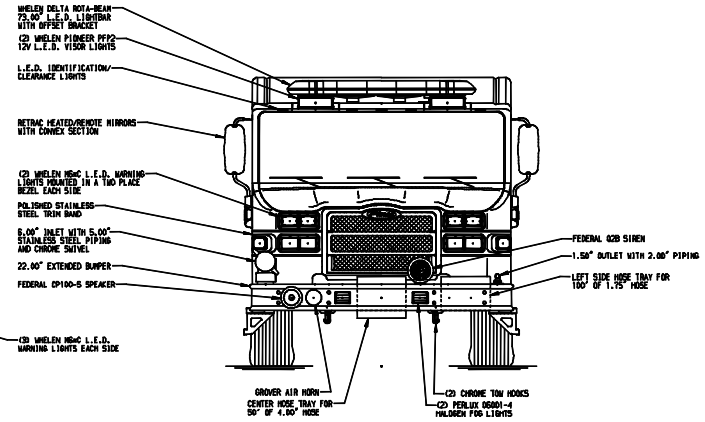

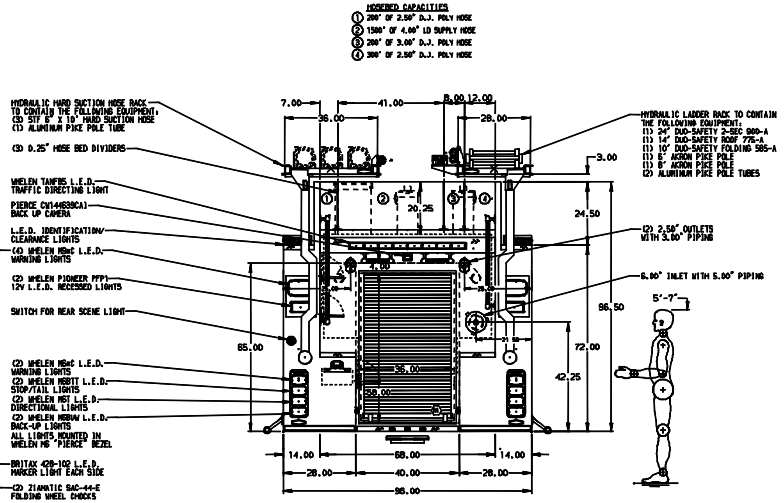

SIDE ROLL AND FRONTAL IMPACT PROTECTION

NOTE

DIMENSIONS SHOWN ARE APPROXIMATE AND ARE SUBJECT TO MINOR DEVIATIONS AS MAY OCCUR OR BE NECESSARY IN CONSTRUCTION.
MINOR DETAILS NOT SHOWN.

1. OMSPOT AUTOMATIC TIRE CHAINS TO BE PROVIDED AT REAR
2. AIR INLET WITH KUSSMAUL AIR EJECT AND WEATHERPROOF COVER LOCATED ON DRIVER SIDE PUMP PANEL
3. MOUNTING BASE FOR ANTENNA LOCATED PER SHOP ORDER
4. BATTERY CHARGER LOCATED IN COMPARTMENT-D3
5. BATTERY CHARGER INDICATOR DISPLAY THROUGH WINDOW BEHIND DRIVER SEAT
6. SHORELINE 120V RECEPTACLE WITH KUSSMAUL AUTO EJECT LOCATED ON DRIVER SIDE PUMP PANEL
7. PERIMETER SCENE LIGHTS LOCATED PER SHOP ORDER
8. POLISHED STAINLESS STEEL DOOR FRAME SCUFFPLATE ON COMPARTMENT-D1,D2,D3,P1,P2,P3
9. ANCHOR L.E.D. COMPARTMENT LIGHTS LOCATED IN ALL SPECIFIED BODY COMPARTMENTS
10. PARTITION BETWEEN COMPARTMENTS D1/R1 AND P1/R1
11. SHELF TRACKS LOCATED IN ALL SPECIFIED BODY COMPARTMENTS
12. 500 LB. FULL WIDTH/DEPTH ADJUSTABLE SHELF IN COMPT -ONE IN P1,D3,P2,P3,TWO IN P1,R1
13. 500 LB. FLOOR MOUNTED FULL WIDTH/DEPTH SLIDE-OUT TRAYS WITH 2" SIDES IN COMPARTMENT-D1,P3
14. TURTLE TILE MATTING ON SHELVES/TRAYS IN ALL SPECIFIED COMPARTMENTS
15. TURTLE TILE MATTING WITH RAMP ON THE FLOOR IN ALL SPECIFIED COMPARTMENTS
16. CIRCUIT BREAKER PANEL LOCATED IN COMPARTMENT-D3
17. SUBFEED BREAKER BOX IN COMPARTMENT-D3
18. ONE 120V DUPLEX RECEPTACLE IN COMPARTMENT-D1
19. AIR OUTLET WITH SHUT OFF VALVE LOCATED ON DRIVER SIDE PUMP PANEL
20. HORIZONTAL EQUIPMENT MOUNTING TRACKS IN COMPARTMENT-D2
21. VERTICAL EQUIPMENT MOUNTING TRACKS IN COMPARTMENT-D3
22. MIC AND SPEAKER COMPARTMENT LOCATED ON DRIVER SIDE PUMP PANEL

REV	DATE	BY	CH	MODEL
100C114	BST	SHE	CHASSIS DATA	VELOCITY FR
100C114	BST	SHE		
23SEP14	BST	SHE	MAKE	
28AUG14	BST	DTS	PIERCE	
08JUL14	BST	CBH		

Pierce MANUFACTURING INC.

JOB NO.	27999
SCALE 1:24	DATE
TITLE	2000-D-1250P W/40 & 20 GAL. FOAM CELLS; GENERATOR 161" PUMPER BODY; HUSKY FOAM SYSTEM; HYD. LDR. RACK
FOR	SAXONBURG VOLUNTEER FIRE COMPANY SAXONBURG, PA
DRAWN BY BST	26JUN14
CHECKED BY GRM	30JUN14
DWG NO. 27999AD	SHEET SIZE D
SHEET NO. 1 OF 1	

View File Created 19-OCT-2014 15:00:01