PASSENGER'S SIDE COMPARTMENTS CONTAIN THE FOLLOWING:

COMPARTMENT P1 CONTAINS:
- (3) STD DEPTH ADJ SHELVES
- (1) STD DEPTH FLOOR MOUNTED TRAY WITH MOUNT FOR ELECTRIC WINCH
- (1) HYDRAULIC REEL WITH 100' OF HOSE
-
-
-

COMPARTMENT P2 CONTAINS:
- (1) RACK FOR 3 SCBA BOTTLES
- (1) "SPACESAVER" 2-BOTTLE FILL ENCLOSURE
- (1) CASCADE SYSTEM CONTROL PANEL
-

COMPARTMENT P3 CONTAINS:
- (1) OIL DRY HOPPER
- (2) 3/4 DEPTH ADJ SLIDE OUT/TILT TRAYS
- (1) 2-WAY FLOOR MOUNTED SLIDE OUT TRAY(1000#)
- (1) VERTICAL COMPARTMENT DIVIDER
- (1) HORIZONTAL FLOOR EXTENSION
-
-
-

COMPARTMENT P4 CONTAINS:
- (1) CAB LIFT CONTROLLER
- (3) 2-WAY FLOOR MOUNTED SLIDE OUT TRAYS WITH TOOLBOARDS
- (1) 2-DRAWER C-TECH CABINET
- (1) 3-DRAWER C-TECH CABINET
- (1) ELECTRIC CORD REEL WITH 200' OF 10/3 YELLOW CORD
- (1) HORIZONTAL FLOOR EXTENSION
- (1) RACK FOR 4 AIR BAGS

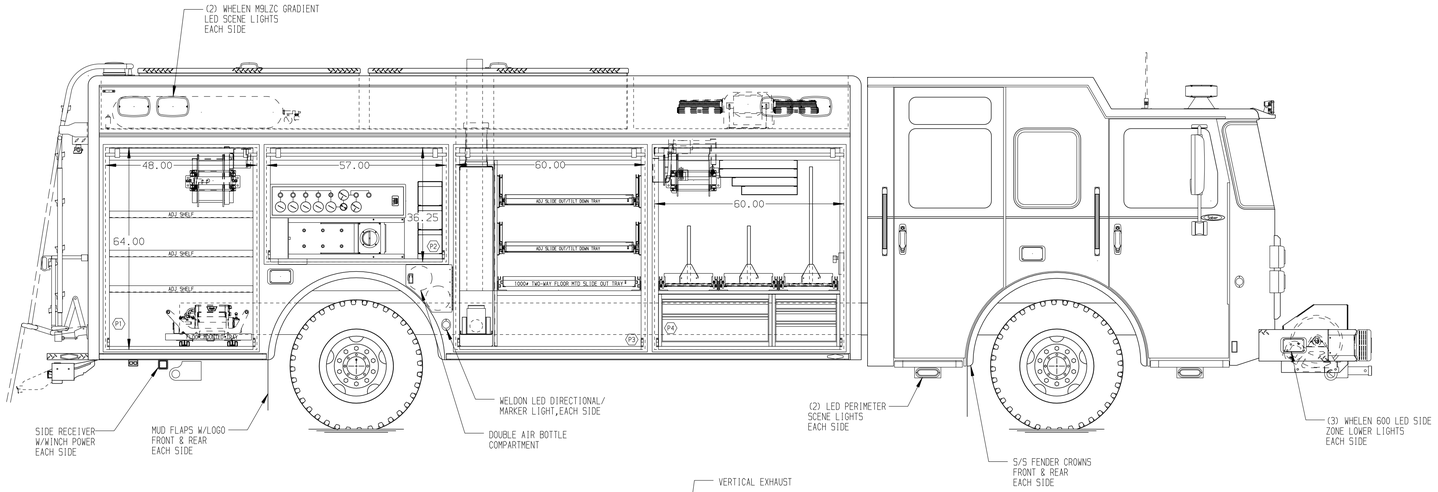

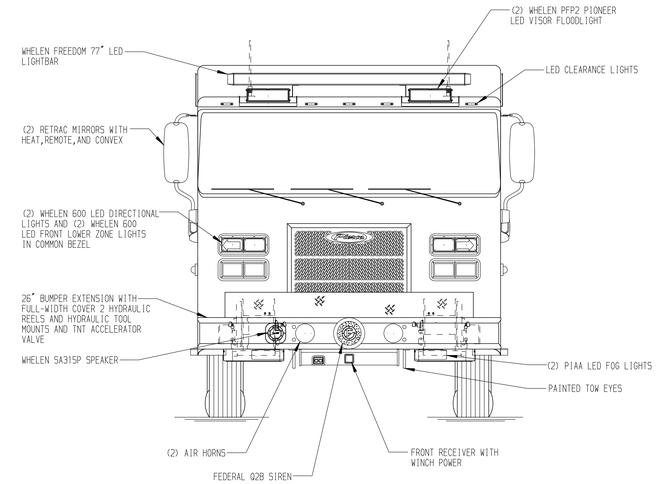

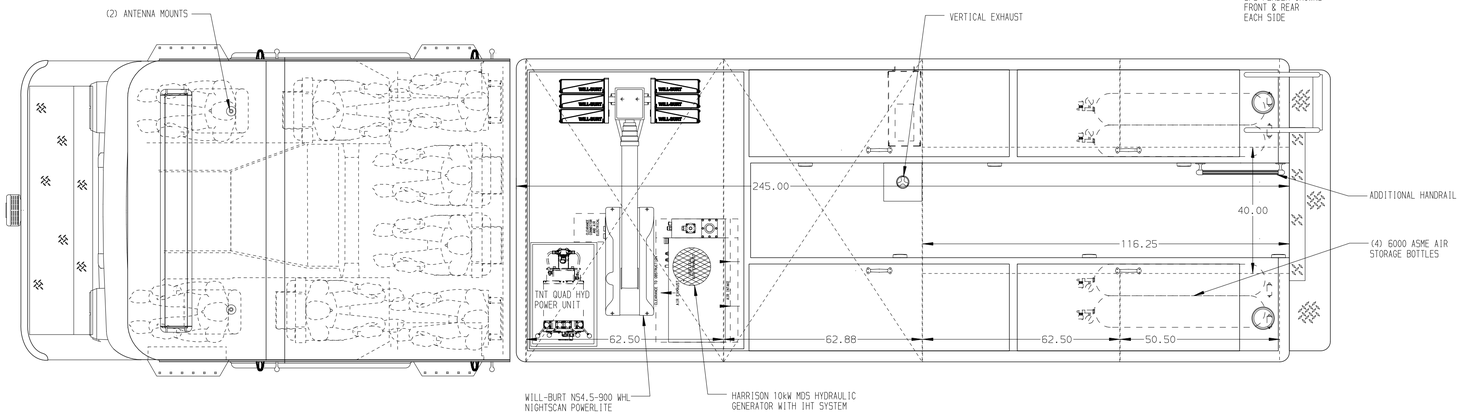

REAR COMPARTMENT CONTAINS THE FOLLOWING:

COMPARTMENT R1 CONTAINS:
- (1) 110" DP FLOOR MOUNTED SLIDE OUT TRAY
- (1) 110" DP FLOOR MOUNTED SLIDE OUT TRAY WITH TOOLBOARD
- (1) HORIZONTAL FLOOR EXTENSION
- (1) 2-DRAWER C-TECH CABINET
- (1) RACK FOR THE FOLLOWING:
  - (1) 28' 2-SECTION LADDER
  - (1) 18' ROOF LADDER
  - (1) 10' FOLDING LADDER
  - (3) BACKBOARDS
  - (2) PIKE POLES
-
-
-

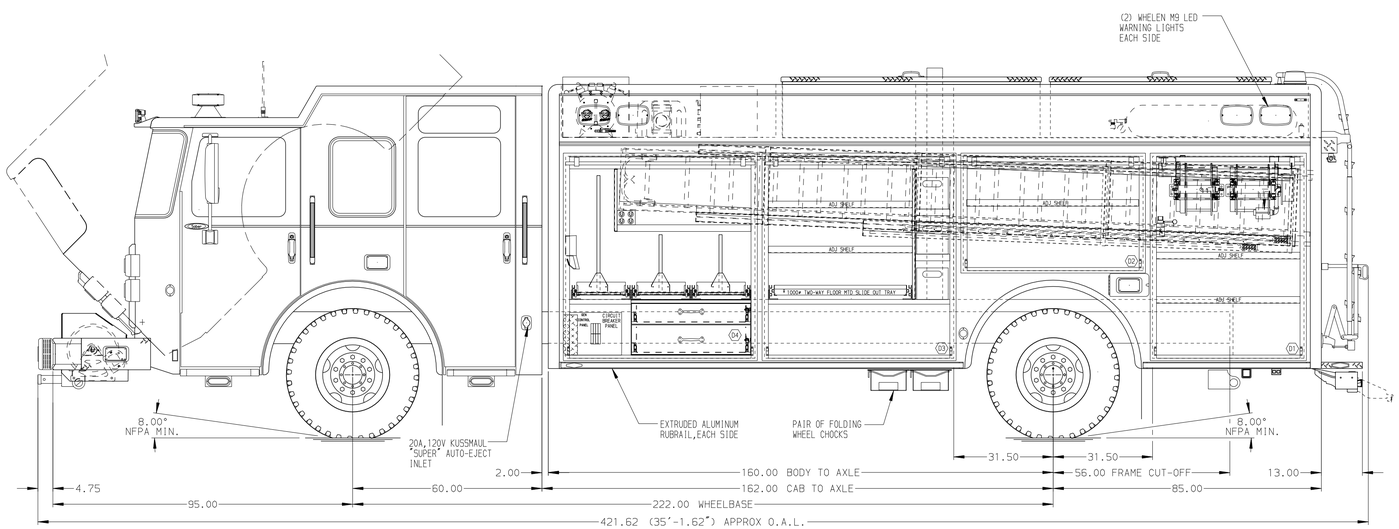

DRIVER'S SIDE COMPARTMENTS CONTAIN THE FOLLOWING:

COMPARTMENT D1 CONTAINS:
- (2) STD DEPTH ADJ SHELVES
- (1) ELECTRIC CORD REEL WITH 200' OF 10/3 YELLOW CORD
- (1) HYDRAULIC REEL WITH 100' OF HOSE
- (1) TNT ACCELERATOR VALVE
-

COMPARTMENT D2 CONTAINS:
- (1) STD DEPTH ADJ SHELF
-
-
-

COMPARTMENT D3 CONTAINS:
- (2) STD DEPTH ADJ SHELVES
- (2) STD DEPTH FIXED SHELVES
- (3) POLY TOOL BOXES
- (1) VERTICAL COMPARTMENT DIVIDER
- (1) 2-WAY FLOOR MOUNTED SLIDE OUT TRAY(#1000)
- (1) HORIZONTAL FLOOR EXTENSION
-
-

COMPARTMENT D4 CONTAINS:
- (1) 2-DRAWER TOOL CABINET
- (3) 2-WAY FLOOR MOUNTED SLIDE OUT TRAYS WITH TOOLBOARDS
- (1) SPECIAL HEIGHT VERTICAL DIVIDER
- (1) FIXED SHELF
- (1) CIRCUIT BREAKER PANEL
- (1) GENERATOR METER PANEL
- (1) SUB FEED BOX
- (1) NIGHTSCAN CONTROLLER
- (1) 15A,120V 4-PLACE RECEPTACLE
- (1) HORIZONTAL FLOOR EXTENSION
- (1) KUSSMAUL PUMP PLUS 1200 CHARGER

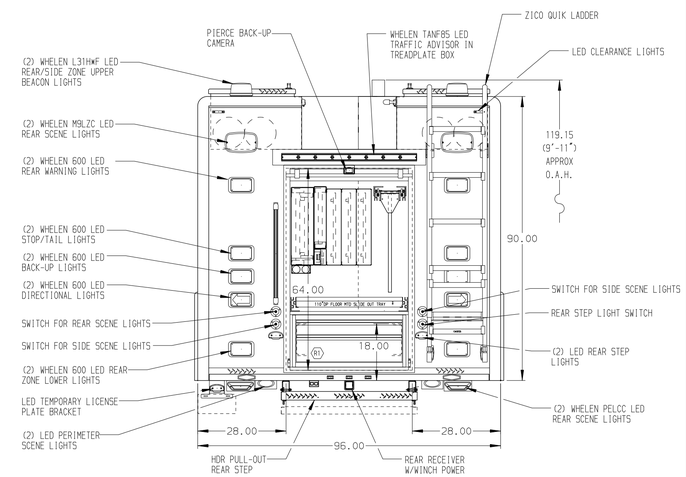

NOTE

DIMENSIONS SHOWN ARE APPROXIMATE AND ARE SUBJECT TO MINOR DEVIATIONS AS MAY OCCUR OR BE NECESSARY IN CONSTRUCTION.
MINOR DETAILS NOT SHOWN.

NOTES:
1. ONSPOT AUTOMATIC TIRE CHAINS
2. WARN #9,000 PORTABLE RECEIVER STYLE WINCH
3. FLOOR IN CAB AND CREW CAB TO BE PADDED RUBBER
4. BATTERY CHARGE INDICATOR LOCATED ON DRIVER'S SEAT RISER
5. (2) #9,000 RECEIVER STYLE TIE DOWNS
6. PIERCE LED STRIP LIGHTS IN EACH BODY AND HATCH COMPARTMENTS
7. TURTLE TILE ON ALL TRAYS, ADJUSTABLE SHELVES AND TOOL BOARD TRAYS
8. TURTLE TILE ON FLOORS IN COMPARTMENTS D1,D2,D3,P1,P3, AND ROOF HATCH COMPARTMENTS
9. (2) 20A,120V RECEPTACLES IN CAB

CLEAR DOOR WIDTH KEY

AMDOR ROLL UP DOORS:	-1 7/8"
GORTITE ROLL UP DOORS:	-2 3/4"
PIERCE DOUBLE LAP DOORS:	-4 1/4"
PIERCE LIFT-UP LAP DOORS:	-1 1/2"

(EX: 60"F-F - 1 7/8"= 58 1/8" CLEAR)
(F-F)= FRAME TO FRAME

REV	DATE	BY	CH
7	15AUG16	DHE	AZU
8	09JUN16	DHE	AZU
9	13APR16	DHE	AZU

CHASSIS DATA
MAKE: PIERCE
MODEL: SBFR6010

Pierce MANUFACTURING INC.

TITLE: HEAVY DUTY RESCUE NON-WALKIN
FOR: SCALES MOUND FPD, SCALES MOUND, IL — RICHARD BERNDT
DWG NO.: 29416AD

JOB NO.	29416
SCALE	1:24
DATE	
DRAWN BY	DHE 30MAR16
CHECKED BY	CDK 31MAR16
SHEET SIZE	D
SHEET NO.	1 OF 1

View File Created 15-AUG-2016 10:59:36