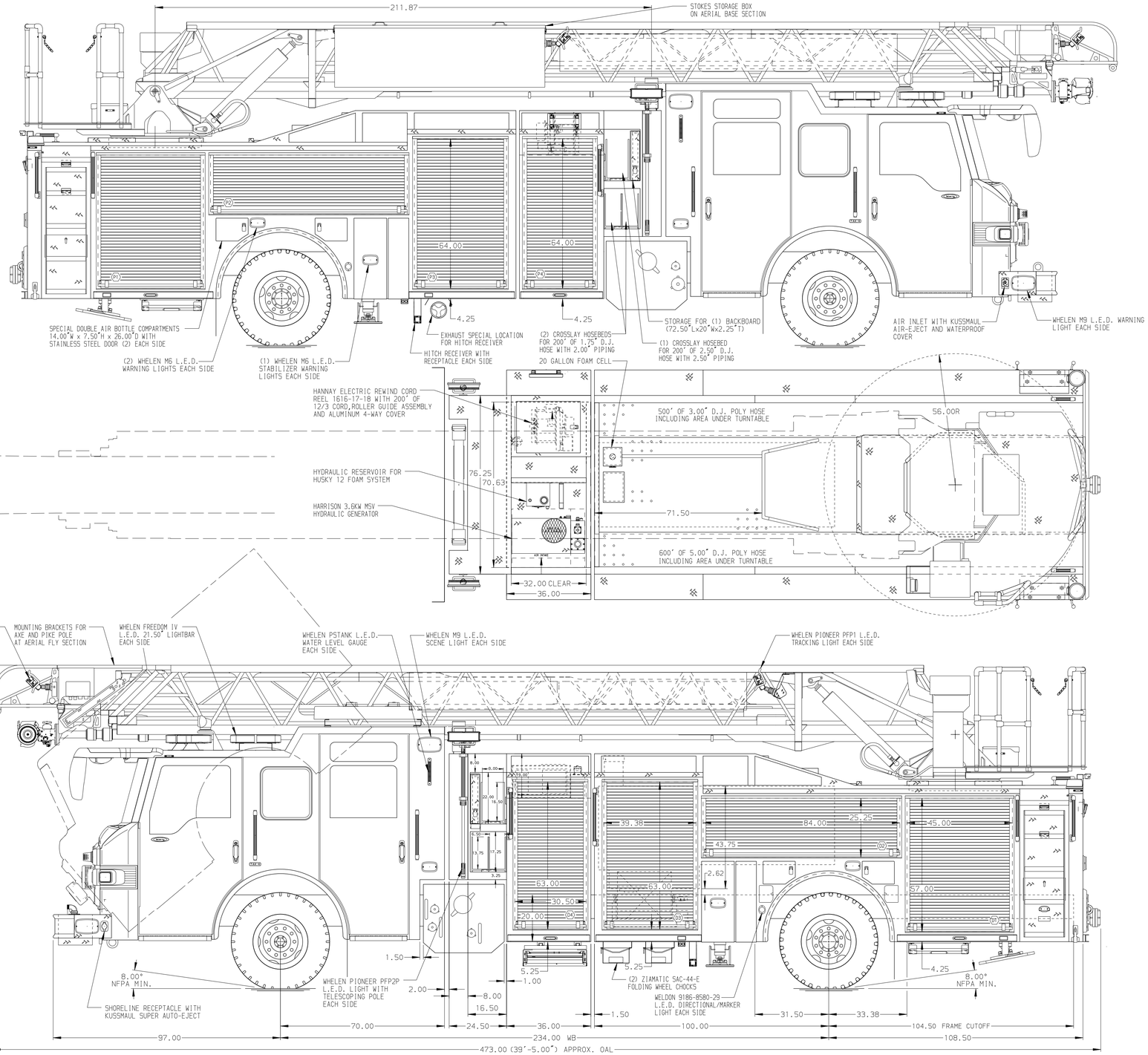

ALUMINUM BODY

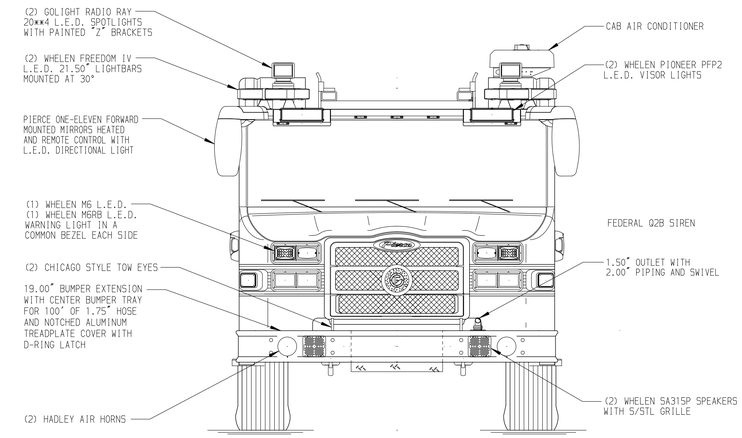

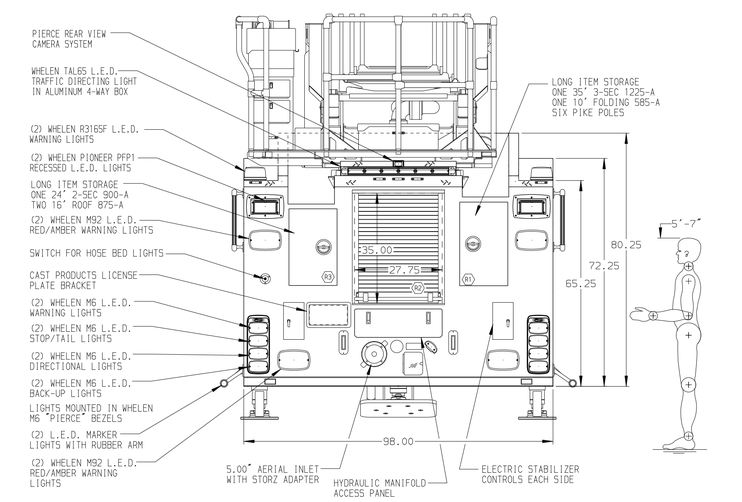

FRONTAL IMPACT PROTECTION

NOTE

DIMENSIONS SHOWN ARE APPROXIMATE AND ARE SUBJECT TO MINOR DEVIATIONS AS MAY OCCUR OR BE NECESSARY IN CONSTRUCTION.
MINOR DETAILS NOT SHOWN.

1. BATTERY CHARGE INDICATOR LOCATED NEAR DRIVER SIDE SEAT RISER WITH BRACKET
2. AIR OUTLET WITH SHUT OFF VALVE AT DRIVER SIDE STEP WELL
3. ONE ADJUSTABLE FULL WIDTH/FULL DEPTH SHELF IN COMPARTMENTS P2,P3,TWO IN D1,D3,P1
4. ONE ADJUSTABLE SLIDE-OUT TRAY IN COMPARTMENT P1
5. ONE FLOOR MOUNTED SLIDE-OUT TRAY IN COMPARTMENTS P1,P3,P4
6. TWO ADJUSTABLE TILT-DOWN SLIDE-OUT TRAYS IN COMPARTMENT P4
7. CIRCUIT BREAKER PANEL IN COMPARTMENT D3
8. ONE HANNAY ELECTRIC REWIND BOOSTER REEL MODEL SBEF30-23-24 WITH 1/3 HP MOTOR 130' OF 1.00" HOSE, ROLLER GUIDE AND REWIND SWITCH IN COMPARTMENT D3
9. L.E.D. LIGHTING ON AERIAL LADDER SECTIONS
10. FIRE RESEARCH 3-WAY INTERCOM SYSTEM BETWEEN AERIAL TIP,PUMP PANEL & TURNTABLE
11. SPREADER BAR FOR LIFTING EYE RESCUE ATTACHMENT AT AERIAL TIP
12. TRIDENT FOLDING STEPS MOUNTED ON AERIAL DEVICE
13. ONGPOT AUTOMATIC TIRE CHAINS TO BE PROVIDED AT REAR
14. 3.50" CHROME SCREW PLATE AT AERIAL TIP FOR STACKED TIPS
15. AIR COMPRESSOR WITH 4-WAY COVER IN COMPARTMENT D3
16. ONE SWING-OUT ALUMINUM TOOL BOARD WITH PEGBOARD PATTERN IN COMPARTMENT D2

REV	DATE	BY	CH
3	16AUG16	SHU	JJR
2	12JUL16	MWA	JJR
1	20MAY16	SHU	CRI

CHASSIS DATA
MAKE: PIERCE
MODEL: VEL7010
DWG NO.

Pierce MANUFACTURING INC.

TITLE: 107' ASCENDANT HSL AERIAL LADDER AND BODY ASSEMBLY 500 GALLON TANK, 480 GAL WATER/20 GAL FOAM
FOR: ST. GEORGE FIRE DEPARTMENT ST. GEORGE, UTAH
DWG NO.: 29887AD

JOB NO.	29887
SCALE	1:24
DATE	
DRAWN BY	SHU 11MAY16
CHECKED BY	GRM 13MAY16
SHEET SIZE	D
SHEET NO.	1 OF 1

View File Created 17-AUG-2016 10:08:01