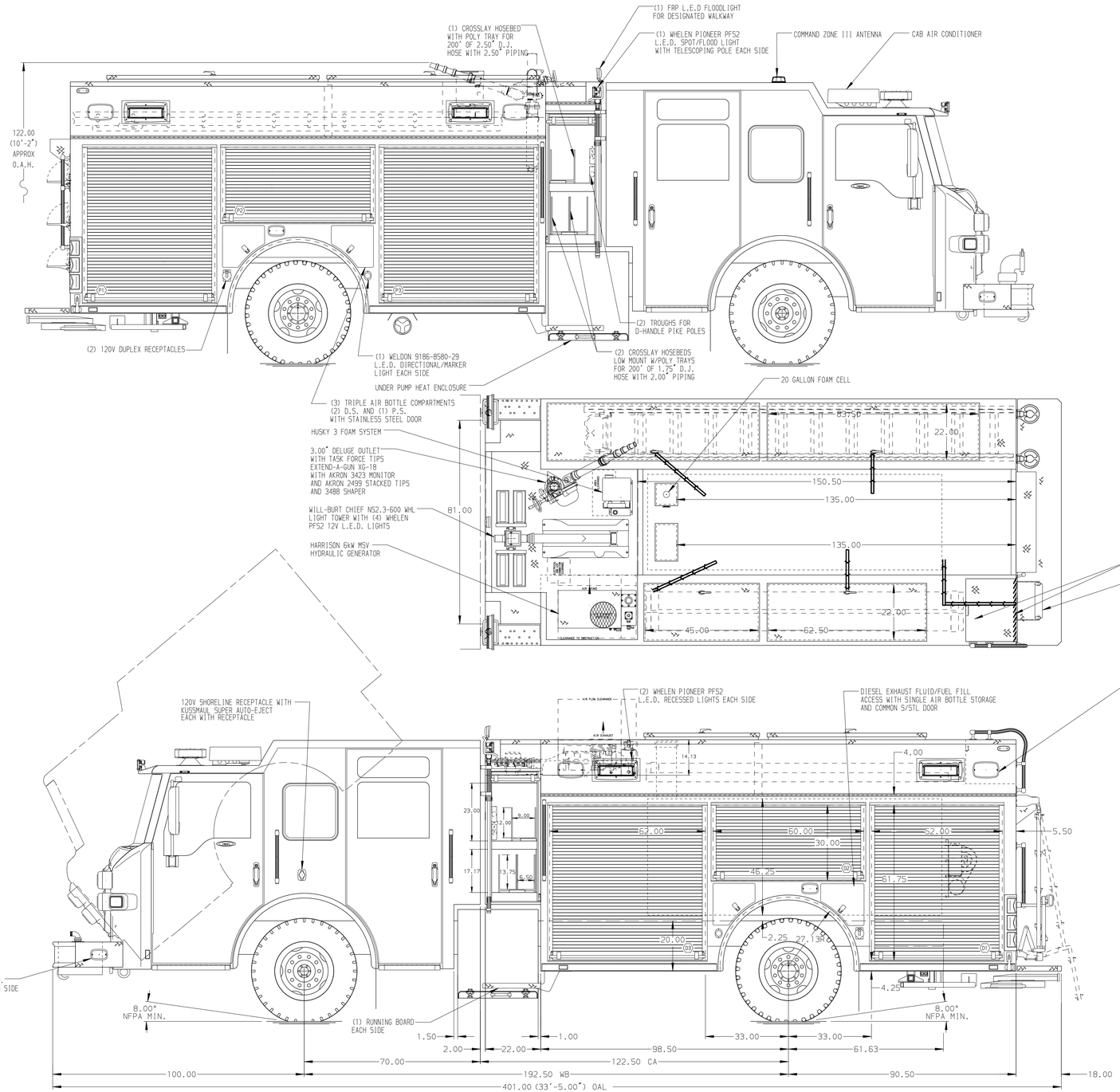

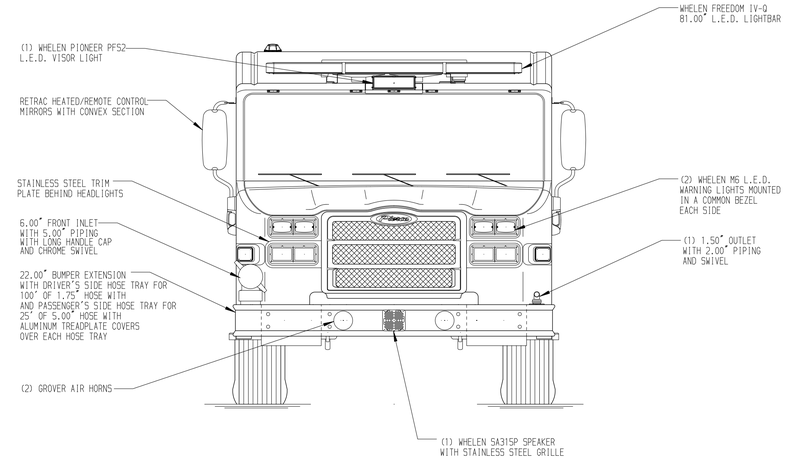

HOSEBED CAPACITIES

1. 900' OF 5.00" D.J. POLY HOSE
2. 600' OF 2.50" D.J. POLY HOSE
3. 200' OF 2.50" D.J. POLY HOSE

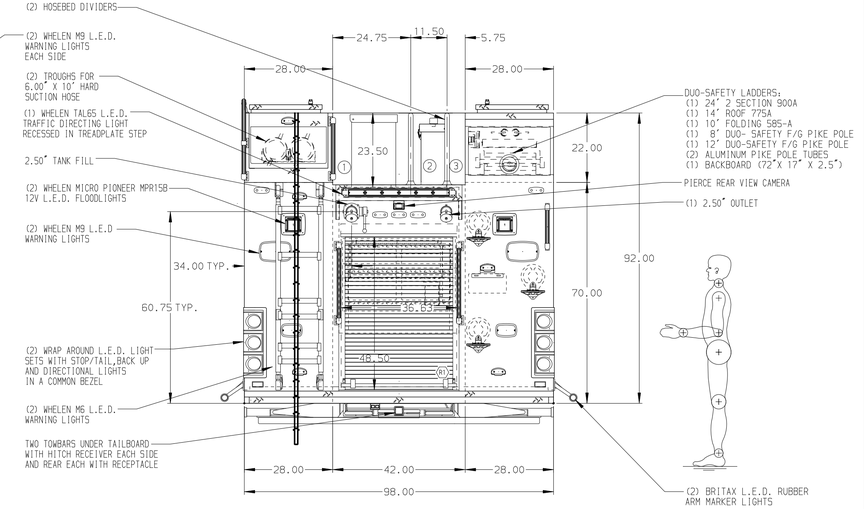

ALUMINUM BODY

NOTE

DIMENSIONS SHOWN ARE APPROXIMATE AND ARE SUBJECT TO MINOR DEVIATIONS AS MAY OCCUR OR BE NECESSARY IN CONSTRUCTION.
MINOR DETAILS NOT SHOWN.

1. WHEEL CHOCKS AND BRACKETS (CTF)
2. BATTERY CHARGER LOCATED BEHIND DRIVER'S SEAT
3. BATTERY CHARGER INDICATOR ON DRIVER'S SIDE STEP AREA
4. ADJUSTABLE FULL WIDTH SLIDE-OUT TRAYS TWO IN D3 AND ONE IN R1 AND P1
5. ADJUSTABLE TILTING SLIDE-OUT TRAYS TWO IN P3 AND ONE IN D1, D2, AND P1
6. ONE FLOOR MOUNTED TWO WAY UTILITY TRAY WITH 4.00" SIDES BETWEEN D1 AND P1
7. ONE FULL WIDTH/DEPTH FLOOR MOUNTED SLIDE-OUT TRAY IN P1 AND P3
8. SWING-OUT ALUMINUM TOOLBOARD IN P2
9. ONE ADJUSTABLE TOOL BOARD MOUNTED TO SLIDE-OUT TRAY IN D3
10. POLY TOOL BOXES THREE IN D1
11. ONE VERTICAL PARTITION IN D2, AND P1
12. ONE DUPLEX RECEPTACLE IN P1
13. 4-SLOT HORIZONTAL AIR BAG RACK IN D1
14. VERTICAL EQUIPMENT MOUNTING TRACKS ONE ON THE VERTICAL PARTITION IN P1 AND ONE ON THE FRONT WALL OF P1
15. PAINTED FLOOR MOUNTED STORAGE RACK FOR FOUR EXTINGUISHERS IN D2
16. CIRCUIT BREAKER PANEL IN D3
17. ONE AKRON ELECTRIC REWIND CORD REEL MODEL ERWC 10-28 IN R1 WITH 150' OF 10/3 CABLE
18. ONE 120V 6-PLACE RECEPTACLE STRIP IN CAB ON ENGINE TUNNEL
19. MOUNTING FOR TNT POWER SUPPLY IN P1
20. ONE HORIZONTAL PARTITION IN D1 AND P1
21. ONE SIDE-OUT ALUMINUM TOOLBOARD IN P1
22. J HOOKS FOUR IN P1
23. ONE VERTICAL PARTITION D1-R1 & P1-R1

REV	DATE	BY	CH
1	240CT16	LST	JBO
2	30SEP16	LST	JBO

CHASSIS DATA
MAKE: PIERCE
MODEL: IMPEL FR

Pierce MANUFACTURING INC.

TITLE: 1500-D-770P, 750G WATER W/20G FOAM CELL; 189" PUC (3) CROSSLAYS; HYD LDDR RCK; DELUGE; GENERATOR; REEL
FOR: CITY OF URBANA URBANA, IOWA
DWG NO.: 30183AD

JOB NO.	SCALE	DRAWN BY	CHECKED BY	SHEET SIZE	SHEET NO.
30183	1:24	LST	MGE	D	1 OF 1
	DATE	12JUL16	15JUL16		

View File Created 25-OCT-2016 07:24:15