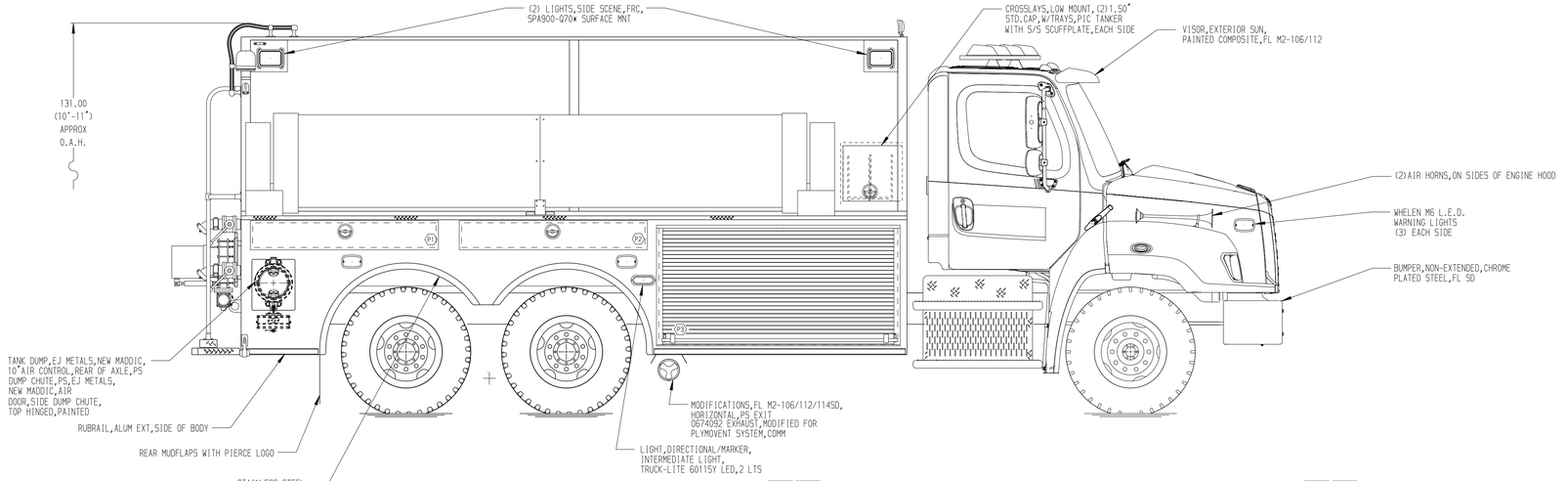

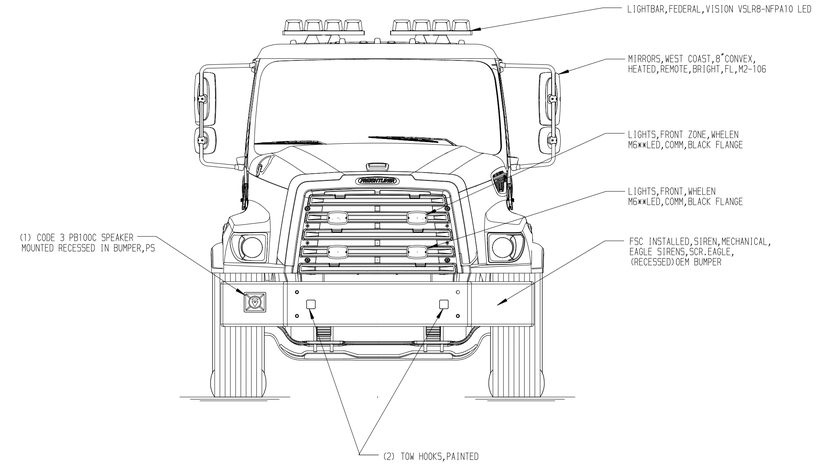

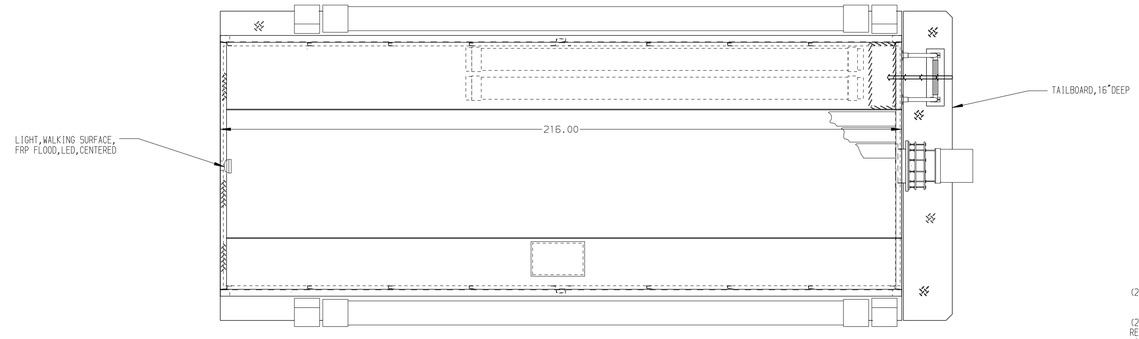

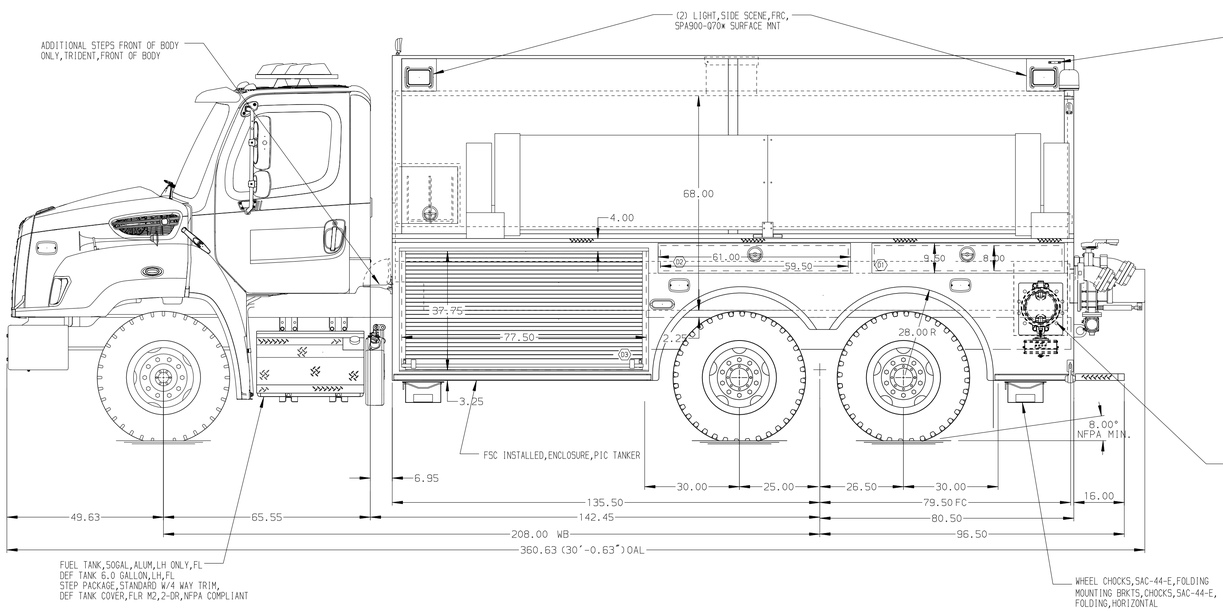

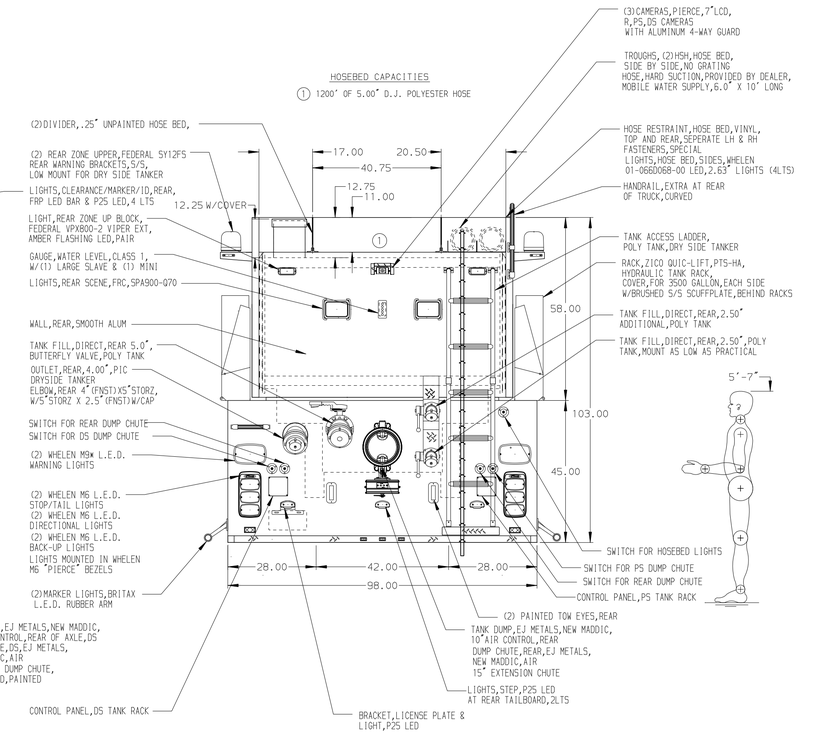

ALUMINUM BODY

MAXIMUM O.A.L. 372"

MAXIMUM O.A.H. 141"

NOTE

DIMENSIONS SHOWN ARE APPROXIMATE AND ARE SUBJECT TO MINOR DEVIATIONS AS MAY OCCUR OR BE NECESSARY IN CONSTRUCTION.
MINOR DETAILS NOT SHOWN.

REV	DATE	BY	CH
3	11FEB17	JLA	DDR
2	15NOV16	JAF	DDR
1	29AUG16	RWI	JAF

CHASSIS DATA
MAKE: FL
MODEL: 114SD

Pierce MANUFACTURING INC.

TITLE: 1000-D-3500 POLY,216"LOW SIDE DRYSIDE W/BROOM COMPT PUMP IN COMPARTMENT

FOR: TOWN OF WAUKESHA
WAUKESHA.WISCONSIN

DWG NO. 30448AD

JOB NO.	30448
SCALE	1:24
DATE	
DRAWN BY	JAF 16AUG16
CHECKED BY	RWI 17AUG16
SHEET SIZE	D
SHEET NO.	1 OF 1

View File Created 15-FEB-2017 11:07:55